BODY BUILDER INSTRUCTIONS

Mack Trucks

Electrical Wiring and Connections
PI / CHU, AN / CXU, GR / GU, TD
LR, TE / MRU
Section 3

Introduction

This information provides design and function, specification and procedure details for Electrical Wiring and Connections for MACK vehicles.

Note: For information on *mDRIVE* PTO installation and wiring see Section 9 PTO Installation, *mDRIVE*.

Note: For information on PTO parameter programming, see Section 9 PTO Parameter Programming.

Unless stated otherwise, following a recommendation listed in this manual does not automatically guarantee compliance with applicable government regulations. Compliance with applicable government regulations is your responsibility as the party making the additions/modifications.

Please be advised that the Mack Trucks, Inc. vehicle warranty does not apply to any MACK vehicle that has been modified in any way, which in MACK's judgment might affect the vehicles stability or reliability.

Contents

- “Abbreviations”, page 3
- “General Wiring Definitions”, page 4
- “Routing and Clipping Guidelines”, page 5
- “Body Builder Connectors, Schematic Examples”, page 17
- “Remote Start n Stop”, page 23
- “Remote Engine Stop”, page 24
- “Adding Auxiliary Accelerator Pedal”, page 25
- “BodyLink III”, page 26
- “Auxiliary Switch Locations (Cab)”, page 30
- “Snow Plow with Extra Auxiliary Lamp”, page 37
- “Power Connections”, page 31
- “Control Link II”, page 46
- “RP170A Refuse Related Chassis to Body Interface Connectors”, page 59

All Rights Reserved

- “LR Work brake”, page 63
- “Data Link System”, page 65
- “Vehicle Accessory Connector (Mack Conventional)”, page 67
- “Termination Resistor”, page 73
- “9-pin Diagnostic Connector”, page 75
- “16-pin Diagnostic Connector”, page 76
- “Multiplexing Body Builder DL5 J1939 CAN ”, page 86
- “Support Inbound and Outbound DL1 J-1939 Message Information ”, page 93
- “CAN Bus Road Speed Signal Kit”, page 103

Abbreviations

Acronym	Description
ACC	Adaptive Cruise Control
ACM	Aftertreatment Control Module
BBM	Body Builder Module
BOC	Back of Cab
CAN	Controller Area Network
CDS	Customer Defined Statement (replaced by DCL)
DCL	DataMax Control Language
ECC/MCC	Electronic Climate Control/ Manual Climate Control
ECM	Engine Control Module
ECS	Electronic Speed Control
EHT	Electronic Hand Throttle
EMS	Engine Management System
ESC	Engine Speed Control
FMI	Failure Mode Identifier
GMT	Greenwich Mean Time
GSECU	Gear Selector ECU
LCM	Light Control Module
MID	Message Identifier (J1587 source)
NOx	Nitrogen Oxide
PGN	Parameter Group Number (J1939)
PID	Parameter Identification (J1587)
PTO	Power take-off
PTT2	Premium Tech Tool 2
SA	Source Address (J1939 unit identifier)
SCU	Satellite Control Unit (Qualcomm)
SID	Subsystem Identification (J1587)
SPN	Suspect Parameter Number (J1939)
SRS	Supplementary restraint system
SSC	Single Speed Control
TCM	Transmission control unit
TPM	Tire Pressure Monitor
VDA	Vehicle Data Administration (OEM database)
VECU	Vehicle ECU
V-MAC	Vehicle Management and Control (Mack's electrical architecture)

All Rights Reserved

General Wiring Definitions

The general wiring definitions provide a standardized list of terminology used in running wires, hoses, and cables throughout the vehicle.

Abrasive Surface	Items capable of causing damage to the routed commodity in a rubbing condition during vehicle operation
AWG	American Wire Gauge
Bundled With	A number of items tied, wrapped or otherwise held together
Cable Tie	A nylon plastic self-sizing strap, UV resistant, capable of bundling specified load(s) during vehicle operation
Chafing	To wear away by rubbing
Contacts	Items touching each other.
Crimped	A routed commodity that is bent or pressed into ridges
Damaged	An item that differs from its original condition
Drooping	Routed items hanging downward, which are detrimental to safe vehicle operation
Dual Fall	(Pertaining to the Compressor Discharge Line) A high point in the routing of the Compressor Discharge Line (located on the engine) whereby any collected moisture is allowed to fall in two different directions where it is either dissipated by heat or is purged
High Current Electrical Cables	Wire sizes 13 mm sq. (0.5 inches sq.) (6 AWG) and larger
High Nut	Extended clamp length
Kinked	A tight bend, curl, or twist in the routed commodity causing flow to be restricted
Low Current Electrical Cables	Wire sizes 8 mm sq. (0.3-inches sq) (8 AWG) and smaller
Low Nut	Standard clamp length
Material Grade 30	Minimum yield strength of 30,000 psi
Material Grade 50	Minimum yield strength of 50,000 psi
May	Verb typically used in a statement of practice that is a permissive condition and carries no requirement or recommendation. It can be included to alter statements of mandate or recommendation
Not Secured	Items not fastened, bundled or tied
Plastic Conduit	Corrugated or smooth wall tubing used to protect hoses, harnesses, cables, tubing, pipes, etc.
Puncture	Small hole or wound
Routed With	Items taking the same path but not attached to each other (i.e., parallel but separate)
Rubbing	Items that contact each other and have independent movement
Shall	Verb typically used in a statement of required, mandatory or specifically prohibitive practice regarding routing and clipping
Sharp Edge	A surface capable of cutting or piercing the routed commodity during vehicle operation
Should	Verb typically used in a statement of recommended, but not mandatory, practice in typical situations with deviations allowed if Engineering judgment or Engineering study indicates that the deviation is appropriate

All Rights Reserved

Twisted	Distorted from the routed commodities' original shape about it's cross-sectional centerline
Touch	Items that contact each other but do not have relative movement

Routing and Clipping Guidelines

1 Brackets used in routing and clipping should be Material Grade 50 or better to ensure sufficient clamp load when sharing joint connections with cross members or other structural members. This applies only to joint connections using a low nut. Brackets of Material Grade 30 are acceptable provided the shared joint is using a high nut. The area of the clip bracket under the bolt head must be a least as large as the bolt head itself.

2 Clips that scratch exterior mounting surfaces shall not be used (i.e., barbed/spring type) unless the material is non-corroding (i.e., plastic). Clips must have rust protection.

3 Clip sizes should adequately secure the bundle without restricting flow, causing collapse, or preventing relative movement.

4 Bundles shall be supported at 24 inches (600 mm) maximum intervals, a cable tie should be used between clip points on bundles with the exception of electrical wiring harness, which shall have a maximum support distance of 18 inches (450 mm) and a cable tie on bundles between clip points. When air and electrical lines are bundled together, the commodity with the greater cross-sectional area may determine the support spacing. A minimum of two cable ties shall be used between clip points to bundle electrical lines when the larger interval is used.

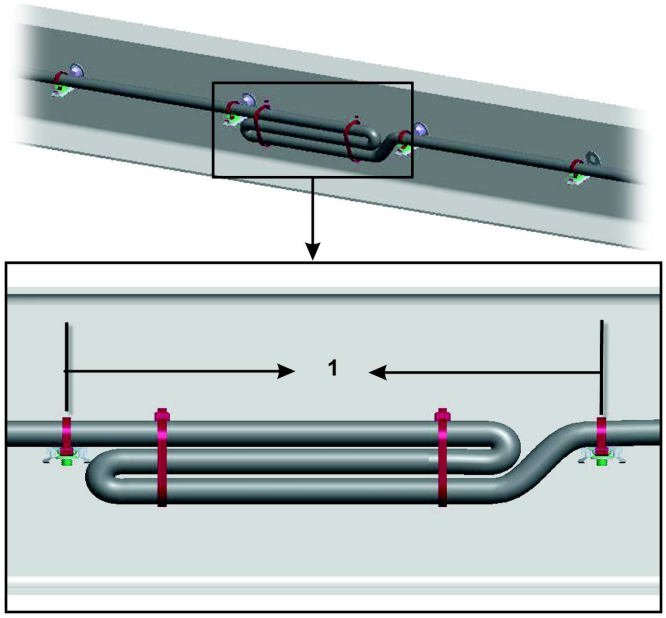

W3104131

1 Support electrical cables every 18 inches (450 mm)

All Rights Reserved

Support Distances, Continued

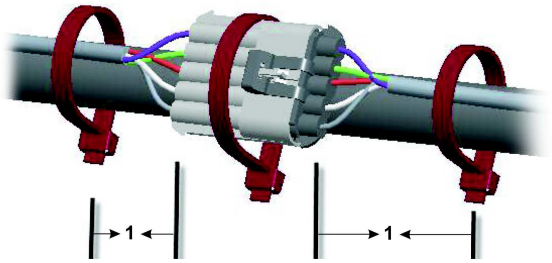

W3104144

1 Support cables near connectors every 4 inches (100 mm)

1 Electrical cables and wiring harnesses are to be secured 4 inches (100 mm) from the wire insertion end of the connector or clipped to the body.

2 Routing and clipping on purchased components (i.e., engine/transmission) should not include removing or replacing a bolt(s), nut(s) or screw(s) installed by the manufacturer. In such cases where this is unavoidable, the bolt(s), nut(s) or screw(s) shall be reinstalled to the manufacturer's specifications.

3 Bundles should not contact sharp edges of cross members. Contact may occur if it is against a smooth surface, a smooth radiused edge or a coined edge and the bundle is secured to prevent independent movement.

4 Hoses, tubing, pipes and electrical conduits shall not rub each other but may touch.

5 The fabric braided portion of the compressor discharge hose is compatible to be bundled with all routed air lines.

6 The compressor discharge pipe shall be routed independent of all other routing.

7 Electric cables/harnesses must not be bundled with fuel or hydraulic lines. The electrical cables/harnesses may be routed parallel with fuel or hydraulic lines, however must remain separated by approved clipping materials. When design control is possible, electrical cables/harnesses will be routed above fuel or hydraulic lines. If fuel or hydraulic lines must route above circuit protected electrical cables /harnesses, the fuel or hydraulic lines will have no fittings or potential leak points above electrical cables/harnesses and shall be minimized to the shortest distance possible over low current electrical cables/harnesses.

8 All associated markings on air and electrical harnesses should have a corresponding clipping apparatus.

9 Critical clipping locations shall be designated on the component to insure proper placement in the vehicle (i.e., tape).

10 Maximum support distance for compressor discharge rigid pipe, 30 inches (762 mm). Pipe to be isolated from support brackets (i.e. rubber isolator).

11 Maximum support distance for compressor discharge flex hose, 24 inches (600 mm).

12 Compressor discharge line should have a constant fall from compressor to air dryer. A dual fall is allowable provided it occurs on the engine and within 24 inches (600 mm) of the compressor.

13 Maximum allowable dip in compressor discharge pipe/hose is one half the outer diameter of the pipe/hose. Preferred routing should have no dips in any of the routings. This is to avoid line blockage due to water collecting and freezing in the line.

All Rights Reserved

Heating Specifications

In order to maintain the integrity of the cables and hoses, observe the following specifications for routing near a heat source.

Cable, hose, or harness type	Specification
Electrical cables and wiring harnesses	5 inches (130 mm) in all directions from turbocharger, exhaust components, and other high heat components
Unprotected hoses, tubing, harnesses, and cables	6 inches (150 mm) above, 5 inches (130 mm) beside and 4 inches (100 mm) below
Hoses, tubing, harnesses, and cables protected by reflective heat sheathing	3 inches (76 mm) above, 2 ½ inches (63.5 mm) beside and 2 inches (51 mm) below
Silicone transmission coolant hoses	2 inches (51 mm) from exhaust manifold and turbo (with reflective heat sleeving), 1 inch (25 mm) from exhaust pipe
Hoses, tubing, harnesses, and cables protected by a heat shield (no reflective sheathing)	3/8 inch (10 mm) between the component and the heat shield. (Not valid for fuel lines)
Refrigerant suction hoses	8 inches (200 mm)

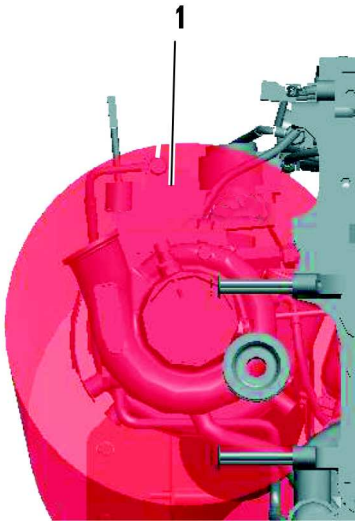

W3109897

1 Heat Radius from the Turbocharger, Front: 5 inches (130 mm)

All Rights Reserved

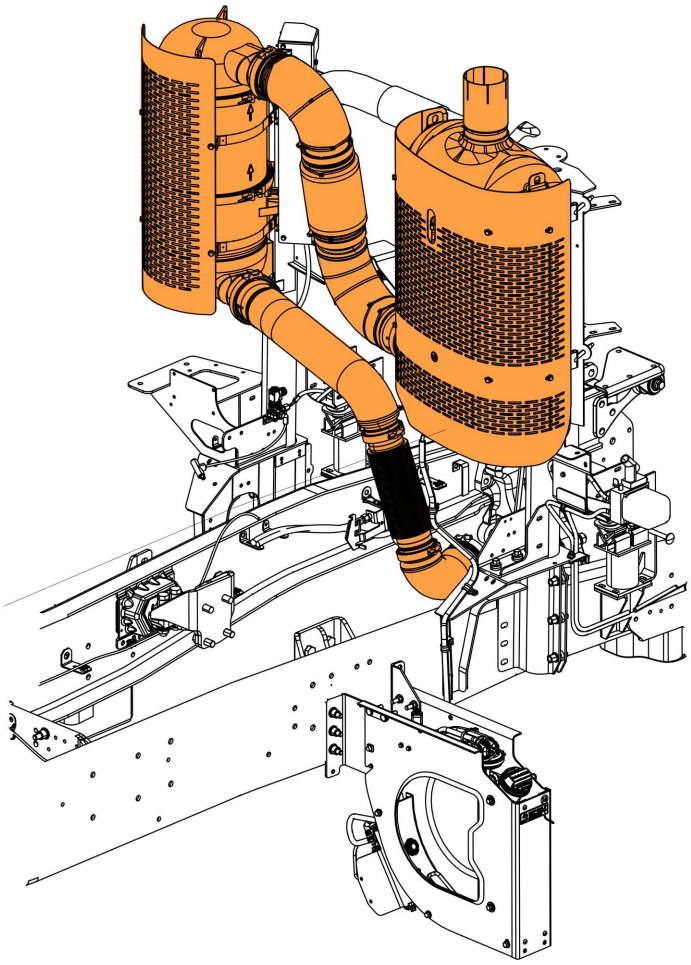

W2106268

The SCR, DPF, and exhaust piping generate substantial heat. Keep electrical cables away from these components.

All Rights Reserved

Clipping Guidelines

Clipping brackets should be designed and mounted to adequately support the bundle. Clips should be mounted in a hanging position or supported along three-quarters of the horizontal mounting surface. Orientations that do not conform to the illustrations shall be tested.

1 When hoses, wires, and cables cross one another, secure them with a clamp. This prevents the sawing motion that could abrade them.

2 When routing flex hoses that are bent in two planes, clip them to prevent twisting. Clamp the hose at the point where the hose changes planes. The clamp has the effect of dividing the hose into two assemblies. If the section of the hose is bent in the same plane as the movement, the bend will absorb the movement and the hose will not twist.

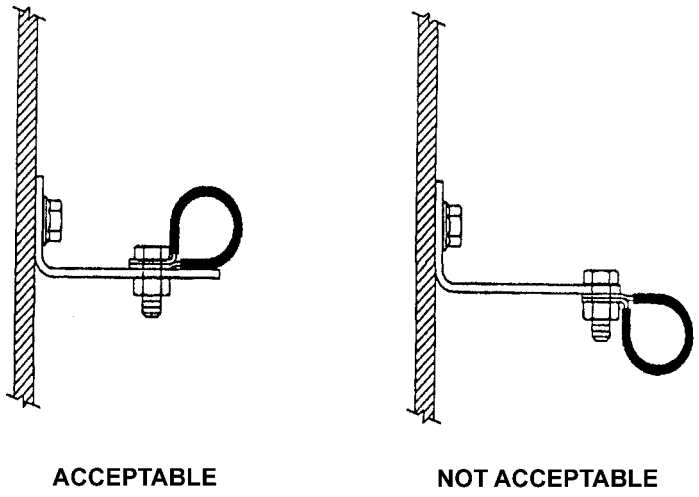

W3103550

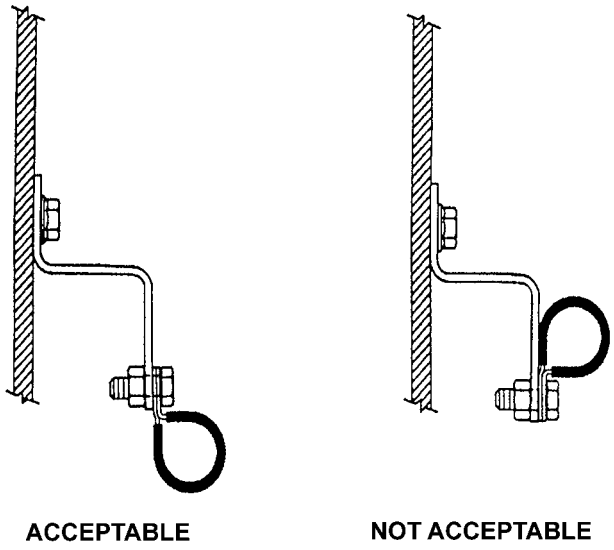

W3103553

All Rights Reserved

When routing connectors with cable ties, ensure that the cable ties do not contact the connector locking tab. Cable ties should also not contact the bare wire.

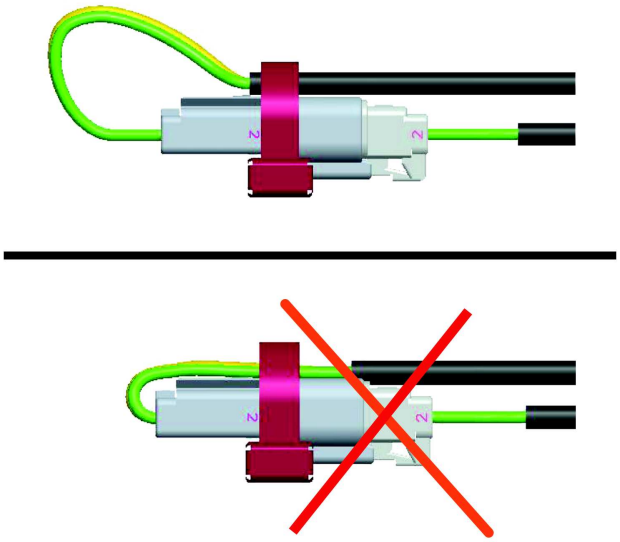

W3104148

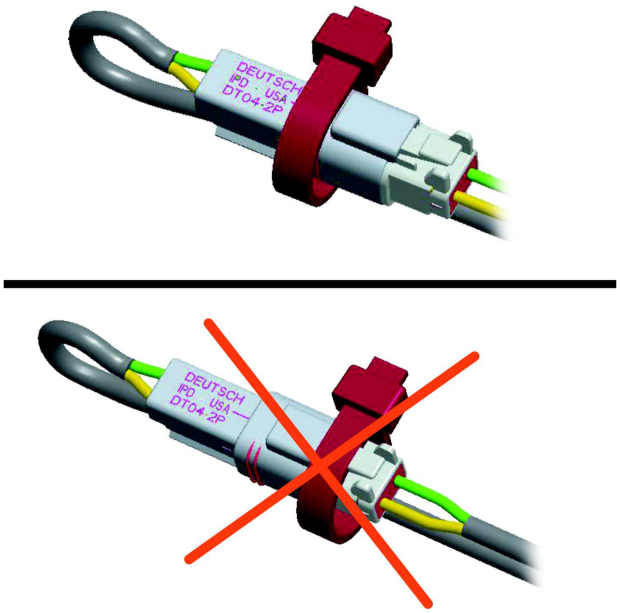

W3104149

All Rights Reserved

Battery Cable Guidelines

The battery cable guidelines prevent electrical interference that can occur from improperly routed cables. In addition, the guidelines prevent cable damage through abrasion.

1 Battery cables with standard SAE stranding shall be supported at 16 inches (400 mm) maximum intervals. A separator type cable tie or an independent separator with cable tie may be used between clip points. No relative movement may occur between cables. If two (2) cable separators are used, they are to be installed equidistant from each other and arranged on a straight line, a maximum span between clip points of 24 inches (600 mm) may be used.

2 Strain relief clipping shall be provided for the battery and starter motor terminals. The strain relief clip shall be located with no relative motion to the terminals. The strain relief clip should be located close to these terminals and shall be within 20 inches (500 mm) cable length to the starter terminals.

3 Grommets shall be installed at points where cables pass through sheet metal or frames.

4 Routing shall avoid exposed edges of frame members, abrasive surfaces, and all sharp edges. When routing inside the frame, ensure that no contact with the frame is made with uncovered cables. Uncovered battery cables, external of the battery box, shall be routed independent of all other conduits. Covered cables may be bundled with other similarly covered conduits and air piping with a secured separator. **Do not route with/under fuel lines.**

5 Cables should be clipped as close as possible to all cable bends.

6 Battery cables shall not be located within 5 inches (130 mm) of engine exhaust related components or other heat sources without heat coverings or heat shielding. Testing shall be performed to determine effects of closer allowances and the use of heat shields. Battery cables should not be installed in any area directly above engine exhaust related components.

7 Where cables flex between moving parts, the last supporting clip shall be securely mounted such that relative movement does not promote chaffing.

8 Battery cables shall not support any mechanical loads other than their own mass.

9 Minimum bend radii of battery cables should be 3 times the cable diameter for standard SAE strand cable.

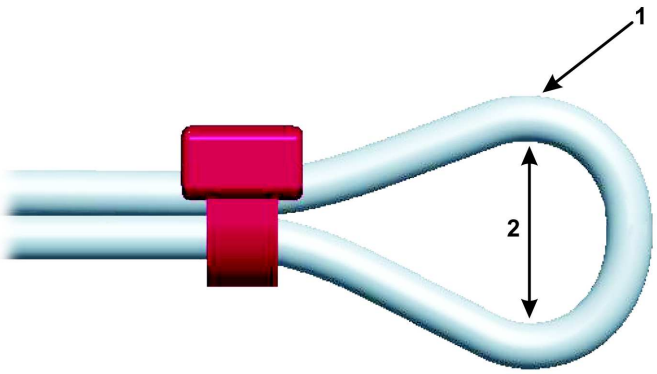

W3104133

1 Tube Diameter

2 Circle Diameter (3 x Tube Diameter)

All Rights Reserved

Battery Guidelines, Continued

1 Star washers shall not be used on current path connections including grounds.

2 Asphalt type loom shall not be used for battery cable protection applications.

3 Battery cables shall not rub each other or surrounding items, but may touch when all items have no independent movement. Uncovered battery cables may not touch each other outside the battery box.

4 All exposed exterior to cab circuit ends shall be coated with a dielectric protective coating. Thickness to be 0.13 – 0.3 inches (3.5 – 7 mm) wet, full coverage, 3 inches (76.2 mm) diameter, or shall be completely covered with required inhibitor.

5 Clip orientations should be per illustration or installation drawings utilizing compression or heavy-duty clip.

6 Plastic conduit may be bundled and cable tied with covered battery cables when all items have no independent movement with each other. Battery cables may touch each other, plastic conduit or the battery, inside the battery box.

7 Covered battery cables may be securely tied or clamped to each other if no independent movement exists. Cables attached to the same terminal stud may be tied or clamped to each other.

8 Battery cable ends at the starter motor posts should be installed and positioned first with the engine harness terminals assembled after. Starter terminals that come with the starter may be first on the starter studs. Terminals shall not be reconfigured or bent.

9 Frame bolt placement, adjacent to the battery box, should have the bolt or screw threaded end facing away from the battery box and any related cables. Wrench grip type bolts should not be used in the frame at the battery box area. Non-wrench grip type bolt or screw threaded ends may face toward the battery box only if clip bracketing or shielding shall be provided to prevent any possible cable contact with frame-mounted hardware. Bolts that mount the battery box to the frame may be oriented toward the battery box.

10 Added abrasion protection should be used where the cable contacts other routed commodities or surfaces with no independent movement such as frame rail surfaces or transmission and engine castings. Polyethylene, polypropylene, nylon conduit and thick wall heat shrink tubing may be used for added abrasion protection.

11 Cables should be located to afford protection from road splash, stones, abrasion, grease, oil and fuel. Cables exposed to such conditions should be further protected by either, or a combination of, the use of heavy wall thermoplastic insulated cable, additional tape application, plastic sleeve or conduit.

12 Anytime an existing fastener is used to secure a clipping bracket (or any similar device), the fastener shall be retorqued to the value specified in the original documentation given for the fastener.

13 Each exposed exterior circuit end must be coated with a dielectric protective coating. Thickness to be 0.13 – 0.3 inches (3.5 – 7 mm) wet, full coverage, 3 inches (76.2 mm) diameter.

14 Do not use box clamps to secure battery cables.

15 In addition to berringer clamps, use double-head tie clamps.

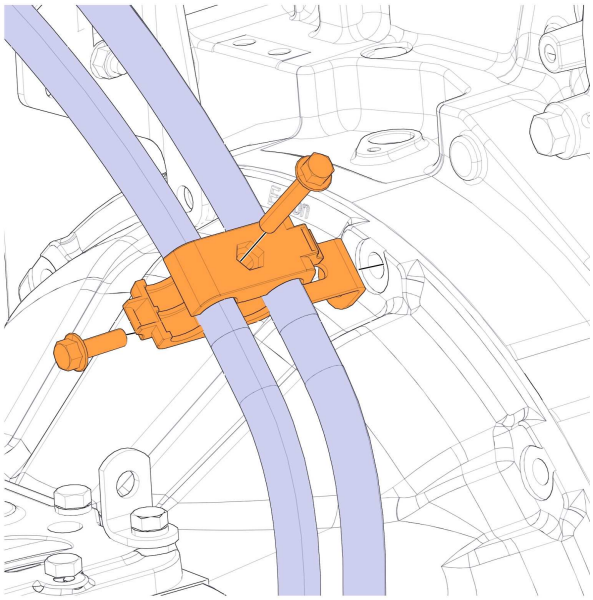

W3077595

Berringer clamps are recommended for securing battery cables to each other.

All Rights Reserved

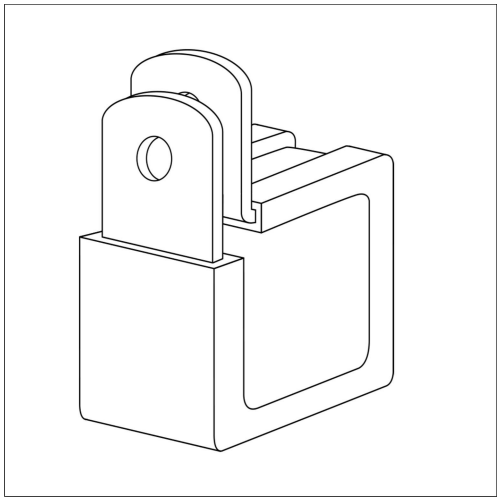

W3105372

Box Clamps (shown above) are NOT to be used for securing battery cables to each other.

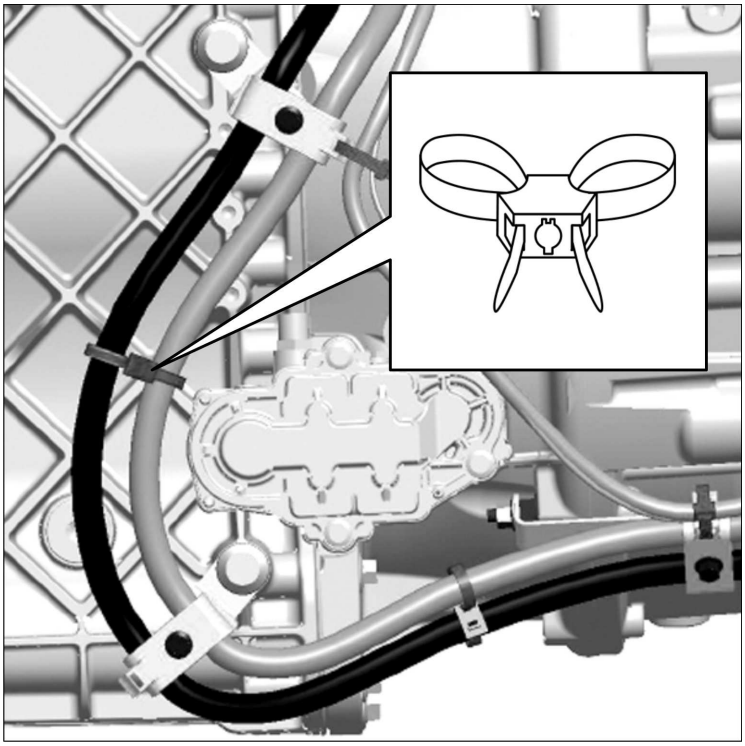

W3105374

Double-head tie clamps may be used to route battery cables.

All Rights Reserved

Ring Terminal Assembly

Assemble terminal carrying the highest current (largest gauge wire) first, then graduate to the smallest gauge up to the fastener. Use a maximum of three (3) terminals per stud (unless otherwise specified on an illustration drawing).

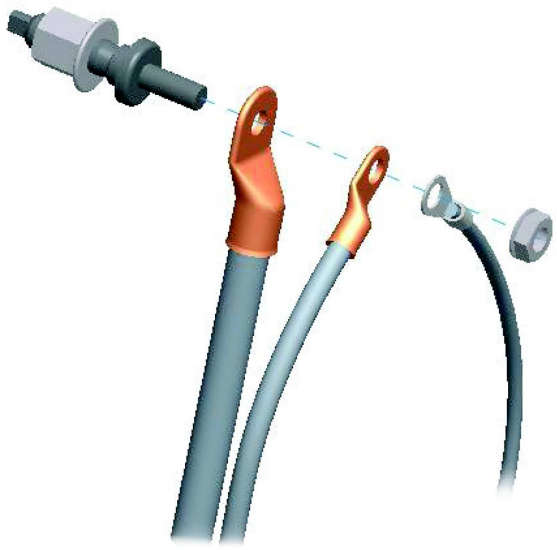

W3104152

When attaching ring terminals with a fastener, tighten the fastener to appropriate torque so that the contact area will touch the terminal at any point, in a full circle that is part of the terminal.

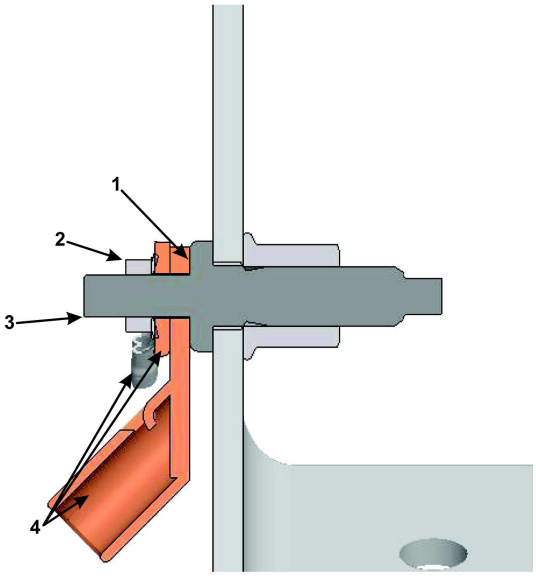

W3104153

1 Contact Area
2 Fastener
3 Stud
4 Terminals

All Rights Reserved

When attaching multiple terminals, position the terminals at an angle to allow maximum contact of the terminal surface. Terminals are not allowed to bend other than their natural form. Terminals may be stacked back to back.

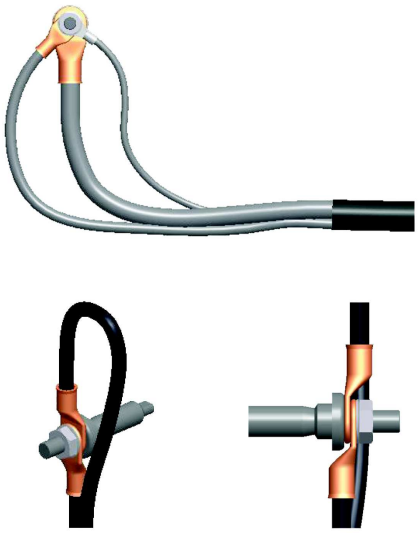

W3104154

Improperly fanned terminals result in unacceptable bends.

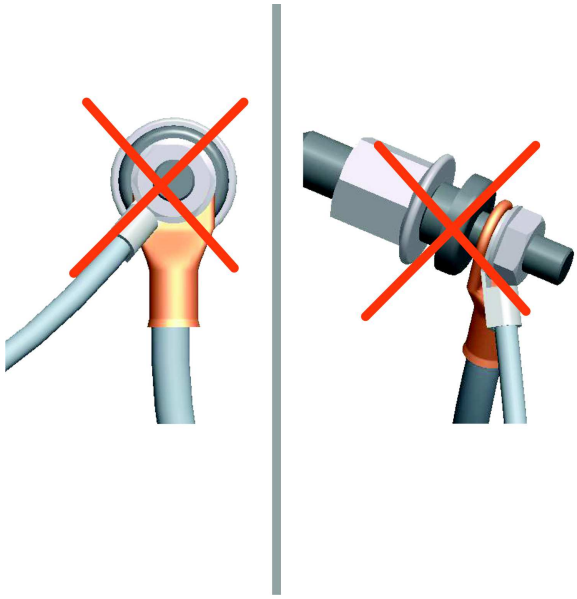

W3104155

All Rights Reserved

NOx Sensor Routing

The NOx sensor requires unique routing considerations. The NOx sensor harness must not be bundled with other wiring harnesses. However, it may be routed with other harnesses as long as they are not high voltage cables. The sensor harness is a set length and no altering or modifying of the NOx sensor harness is allowed.

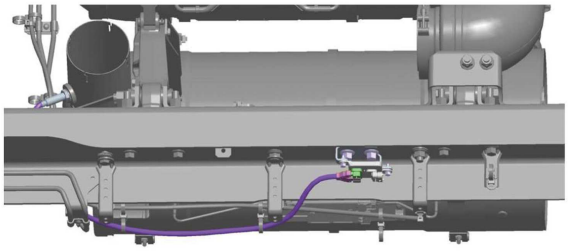

W3104156

Conventional

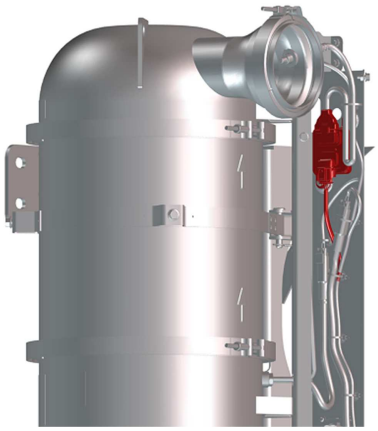

W3109892

Cab over

Note: DO NOT splice into a V-MAC, ABS/ATC or any other electronic control unit harness.

Do not cut or tap into the J1939 green/yellow twisted wires or any other wire or harness used on this vehicle. Use the provided connectors, and only add approved J1939 components with validated software. Failure to comply may result in personal injury or equipment damage. Any cutting, splicing, alteration or modification to the wiring will Void the Mack Trucks Warranty on the Electrical System.

All Rights Reserved

Body Builder Connectors, Schematic Examples

Third-party devices are often installed on Mack Trucks. These devices need information (vehicle speed, gear, etc.) to operate safely and efficiently. However these devices are not quality controlled as far as MACK is concerned, and are not part of the main control databus. Therefore, MACK provides an external connector to supply a body device with the necessary information it needs to function properly.

Mack Trucks do not use an external body builder module (BBM). In Mack Trucks, the functions of the BBM are managed by the Vehicle Electrical Control Unit (VECU) and are transmitted to the body device via an SAE J1939 connector. SAE J1939 is a communications link between standalone vehicle modules. This data link is commonly referred to as the “Control data link”. It is used primarily to transmit control signals that are shared between other standalone modules. The information on the SAE J1939 control link is used for control functions. Fault messages or diagnostic information also transmits across this link. These control signals may be for engine, transmission, brakes or a number of other vehicle controls needs. The J1939 operates at 250,000 bits per second, which is approximately 26 times faster than the J1708/1587 data link. This higher speed allows the system to operate at a faster sampling rate and higher resolution, thus enabling better control of vehicle functions.

Terminating Resistors

Terminating resistors are wired to each end of the SAE J1939 data link to prevent signal reflections. They must remain connected for the data link to function properly. The resistance value of each termination resistor is 110 – 130 Ω. When properly installed in the data link, their combined resistance is 50 – 70 Ω since they are connected in parallel.

The termination resistor at one end of the SAE J1939 data link is located in the fuse and relay centre (FRC) near the vehicle electronic control unit (VECU) and the other near the engine control module (ECM). On vehicles equipped with MACK engines, the termination resistor at the engine end is located inside the ECM. On vehicles equipped with Cummins engine, the termination resistor is located in the harness area just outside of the ECM.

A SAE J1939 data link connection is located at the transmission area in the chassis harness. On vehicles equipped with an electronically controlled transmission (Allison/Autoshift II/Meritor Freedom Line), the connection to the transmission is located at the chassis harness. On vehicles equipped with a manual non-electronically controlled transmission - the connector stub will have an unterminated blanking plug installed.

Only two termination resistors are used in each data link. Never install more than two terminator resistors in one data link. If more than two resistors exist in the SAE J1939 data link circuit, incorrect or absent signals may occur. You can easily check to see if you have two resistors by measuring the resistance between pin C and D for the 9-pin diagnostic connector, or pin 3 and 11 for the 16-pin diagnostic connector, with the ignition key in OFF position. The correct resistance is 50 – 70 Ω. The termination resistors should each have a resistance of 110 – 130 Ω when tested individually.

Notes

All Rights Reserved

Electrical Wiring and Connections

Main Power and Starting Circuits

Figure 1 shows the starter circuits. Note that the EMS and VECU directly control the starter relay. The EMS inhibits starter for engine running, starter overheat and PTO. The VECU inhibits the starter mainly for transmission in gear.

Figure 2 shows the main power circuits. Ignition and “EMS” power are controlled by the VECU through relays. “EMS” power is connected after the key is turned on and remains on during crank and for some seconds after key off, mainly to service the Engine Management System. Ignition power is similar, but is disconnected during crank and supplies items not necessary for engine start. MACK conventional trucks actually have a second set of ignition circuits for items not normally needed for driving (e.g. Sleeper) which also supplies one of the Granite BodyLink III power pins indicated in Figure 7. The first and second power relays are also shut off at low voltage. The first relay powers off at a lower threshold than the second.

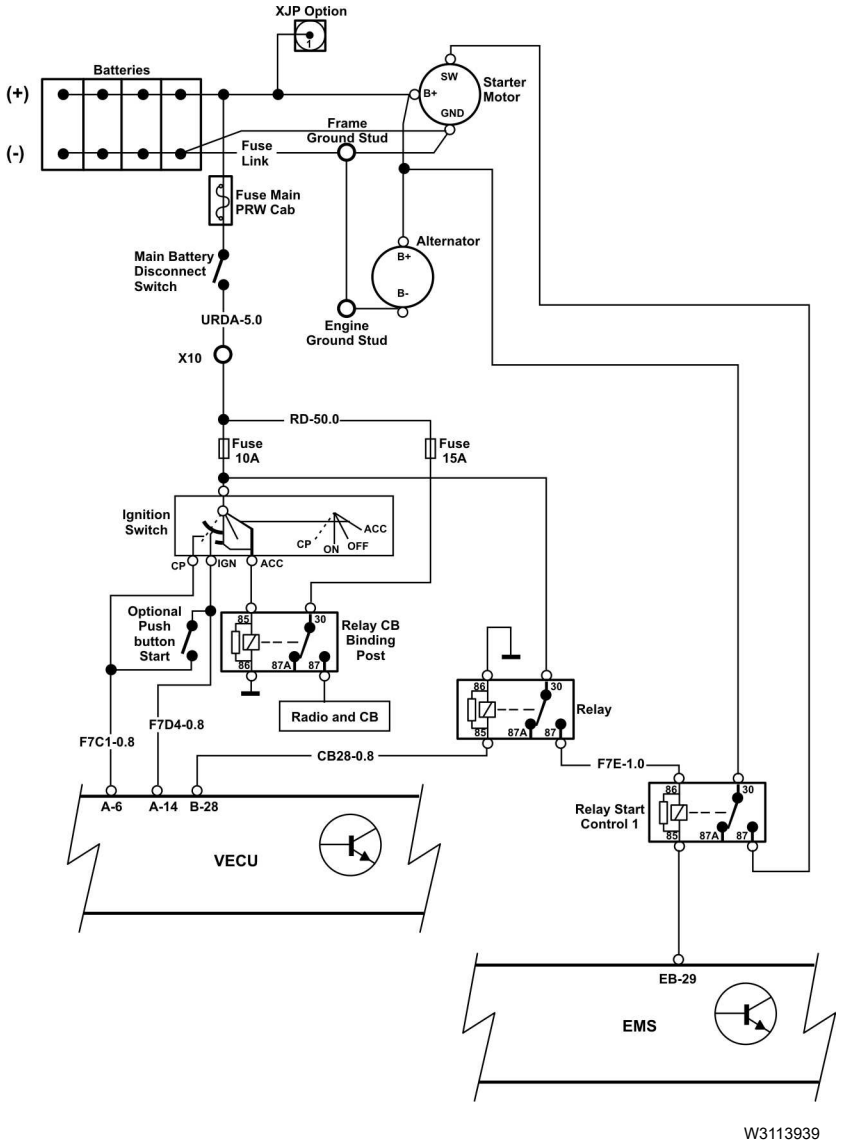

Fig. 1 Main Power and Starting Circuit

All Rights Reserved

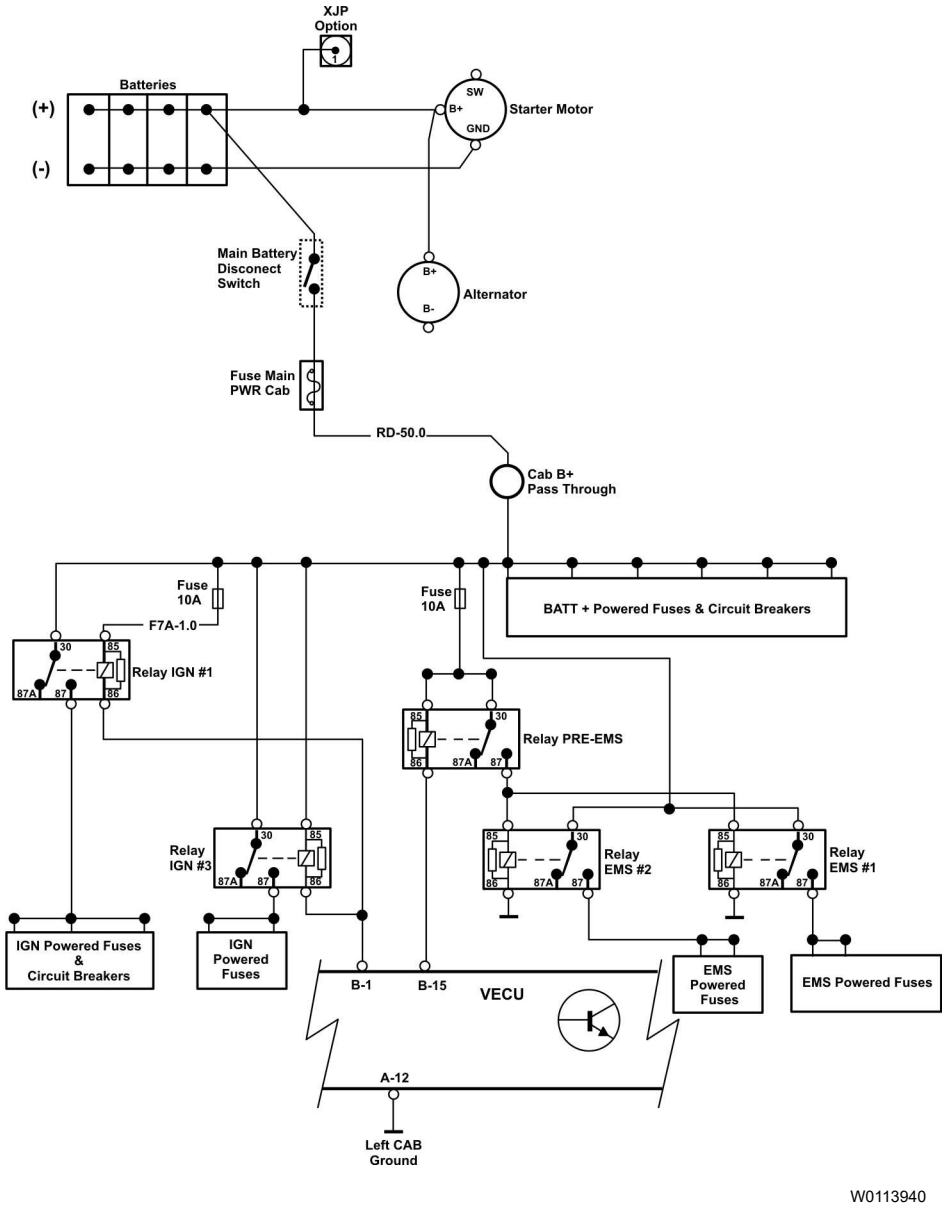

Fig. 2 Battery & Ignition - Switched Supplies - Conventional Trucks

“IGN” circuits will be disconnected at LOW VOLTAGE and during STARTING.

“EMS” circuits remain powered while at key ON or CRANK and may remain powered at key OFF.

All Rights Reserved

Vehicle Control Unit (VECU) Connections

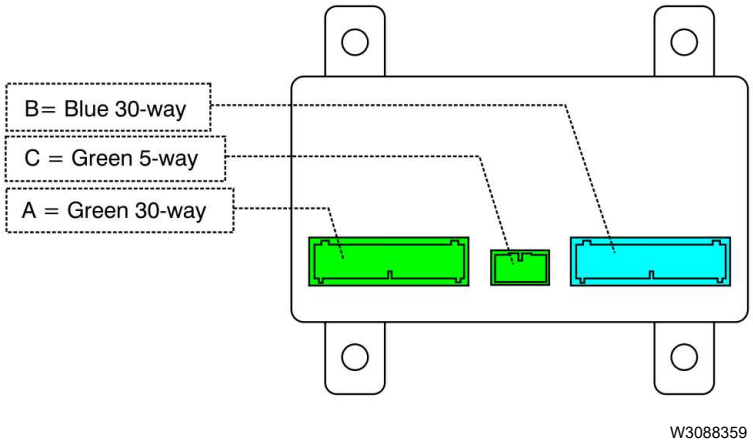

Fig. 3 Vehicle Control Unit (VECU) Connectors

Notes

All Rights Reserved

VECU Connector A (Green)

Pin Number	Type	Mack Name
PA-1	DI-H	Cruise Control: Set/Decel
PA-2	DI-H	Cruise Control: Resume/Accel
PA-3	DI-H	Cruise Control: On/Off
PA-4	DI-H	A/C On
PA-5	DI-H	Service Brake
PA-6	DI-H	Key Switch Crank
PA-7	DI-H	—
PA-8	DI-H	Clutch
PA-9	DI-H	Neutral
PA-10	DI-H	Air Suspension Interlock
PA-11	DO-L (1A)	DRL Control
PA-12	–	Ground
PA-13	–	Battery (+ after PWR)
PA-14	DI-H	Key Switch Ignition
PA-15	–	J1939 + BBM
PA-16	–	J1939 – BBM
PA-17	DI-H	CDS 2 switch/PTO 4
PA-18	DI-H	IVS2 used for Volvo automatic gearbox
PA-19	DI-H	Fan Override
PA-20	DI-H	Engine brake 2
PA-21	DI-H	Engine brake 1
PA-22	DI-H	EOL
PA-23	DI-H	IVS 1
PA-24	DI-L	—
PA-25	DI-L	Interwheel Lock
PA-26	DI-L	Fifth wheel Slide Switch
PA-27	DI-L	Remote Engine Shutdown
PA-28	DI-L	Hood Tilt Switch
PA-29	DI-H	PTO1
PA-30	DI-H	DRL Override

All Rights Reserved

VECU Connector B (Blue)

Pin Number	Type	Mack Name
PB-1	DO-L (1A)	Power Relay #1 (load shedding)
PB-2	DO-L (1A)	Power Relay #2 (load shedding)
PB-3	DO-L (1A)	Interwheel differential lock
PB-4	DO-L (1A)	Fifth wheel Slide Interlock /Regen Inhibited
PB-5	(12 v, 50 mA)	Output Supply 4
PB-6	Frequency Input	Vehicle Speed Sensor +
PB-7	DI-H	PTO 2
PB-8	AI (4K)	Throttle Pedal Signal
PB-9	AI (2 - 10K)	Spare
PB-10	(5 V, 10 mA)	Output Supply 1, (T.P.)
PB-11	DI-L	Parking Brake
PB-12	DI-L	EB steering wheel 1
PB-13	DI-L	RH Operation
PB-14	AI (1.5 – 4 K)	Spare
PB-15	DO – L (0.2A)	EMS Relay
PB-16	DO-L (1A)	Aux Fan
PB-17	DO – H (10 mA)	Buffered IVS 1 (Only EMS)
PB-18	DO-L (1A)	PTO output
PB-19	(12 V, 70 mA)	Output Supply 3
PB-20	Frequency Input	Vehicle Speed Sensor -
PB-21	DI-H	CDS 1/PTO 3
PB-22	—	Analog Ground
PB-23	—	Analog Ground
PB-24	AI (2 - 10K)	—
PB-25	(6.5 – 9 V, 15 mA)	Output Supply 5
PB-26	(5 V, 10 mA)	Output Supply 2
PB-27	AI	Spare
PB-28	DO – H (2A)	Starter Control (ASSIST or starter protection)
PB-29	DI-L	Door Switch
PB-30	DI-H	Shut Down Override

VECU Connector C (Green)

Pin Number	Mack Name
PC-1	J1587 B
PC-2	J1587 A
PC-3	—

All Rights Reserved

Pin Number	Mack Name
PC-4	J1939 H
PC-5	J1939 L

Remote Start n Stop

Note: This is only a suggestion for a body builder installed system.

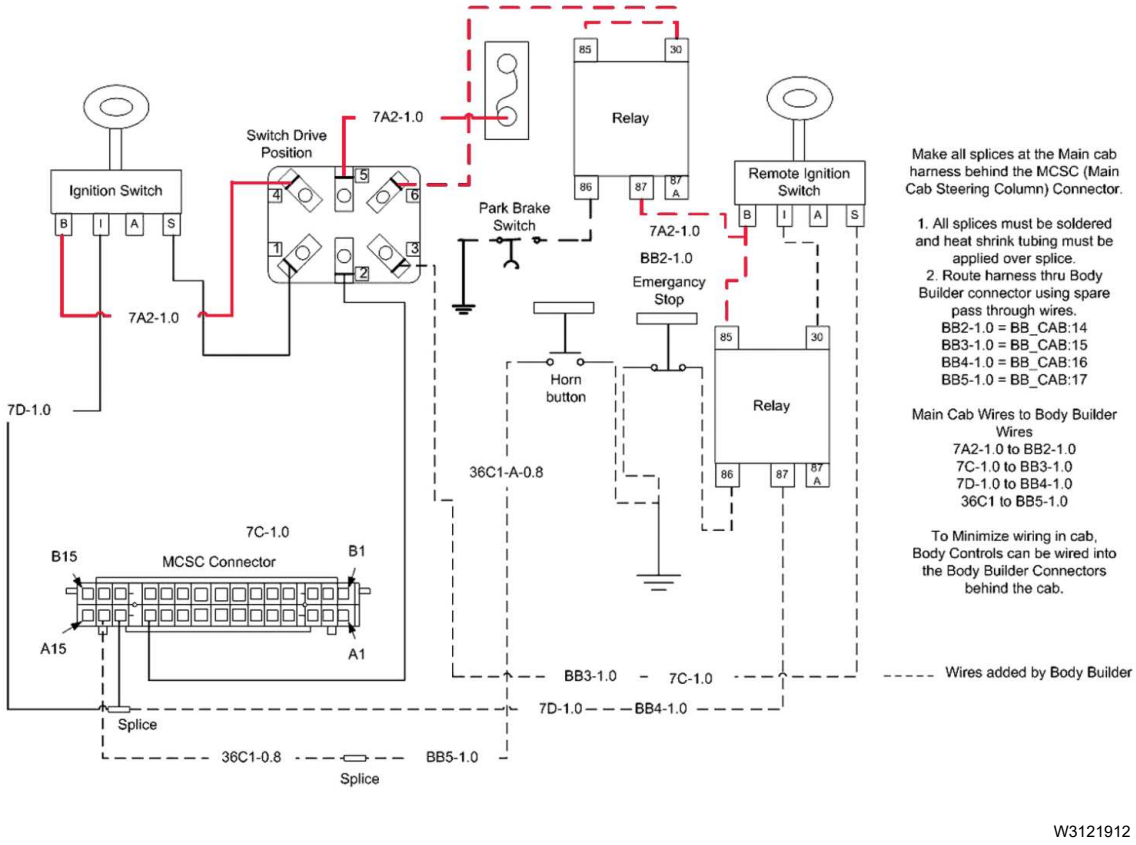

Fig. 4 Remote Start N Stop V-MAC IV

Note: Refer to “Remote Start N Stop V-MAC IV, Schematic Components” table for descriptions and part numbers.

Remote Start N Stop V-MAC IV, Schematic Components

Description	Part Number
Relay	25171095
Relay Connector	20865681
Terminal Female	925AM22
Terminal Male	20865699
Secondary Lock	25154889
Switch Drive Position	25153559
Switch Drive Position Connector	21402299
Terminal Drive Position Switch	25091569
Park Brake Switch	25171211

All Rights Reserved

Remote Engine Stop

If a chassis was ordered with “Remote Engine Stop”, a relay is pre-installed in the harness. Installation of the push-button switch is all that is required.

If installing “Remote Engine Stop” to a chassis (TE/MRU, LR and Conventional Chassis’), relay P/N 25082390 must be installed in addition to installing the push-button switch. Only TE/MRU and LR models are pre-wired for the Remote Engine Stop.

Note: For Remote Engine Stop to work you must run an accessory kit and P/N 85137397 reprogram the VECU (Can only be done by a Dealer) and parameters need to be programmed. See “Remote Engine Stop” in the Body Builder, Parameter Programming service bulletin.

Note: The input to the VECU pin A27 (Green 30-way connector on VECU) is an active low digital input that must be attached to an isolated signal ground.
DO NOT switch chassis/cab ground to pin A27 of the VECU. Interference from other components on the chassis/cab ground could cause an engine shutdown when not requested by the body builder.

Note: The switching of ground to an input that carries a very low current requires special switching equipment. It is recommended using a switch with gold contacts, or a relay to switch the signal ground to Pin A27 of the VECU.
Gold resists corrosion on the contacts and relays have enough ‘swiping’ motion on the contacts to help keep them clean.

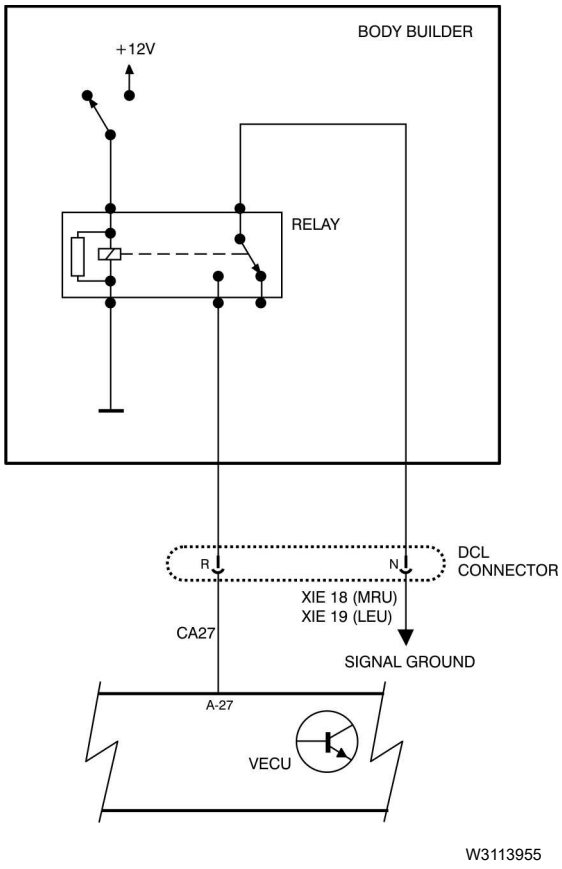

Fig. 5 Remote Engine Stop

All Rights Reserved

Adding Auxiliary Accelerator Pedal

Below is a suggestion for adding an auxiliary accelerator pedal, based on the Mack LR dual steering solution.

The pedal is wired in parallel using a multipin selector switch. If the signal is not switched between the two accelerator pedals, a fault code may be generated due to high current at the throttle pedal signal input line (VECU B-8).

Note: See data link system before using such a device.

Note: An identical pedal is needed for the auxiliary sensor accelerator pedal because it requires an IVS signal. A substitute type pedal may cause a fault code and is not recommended.

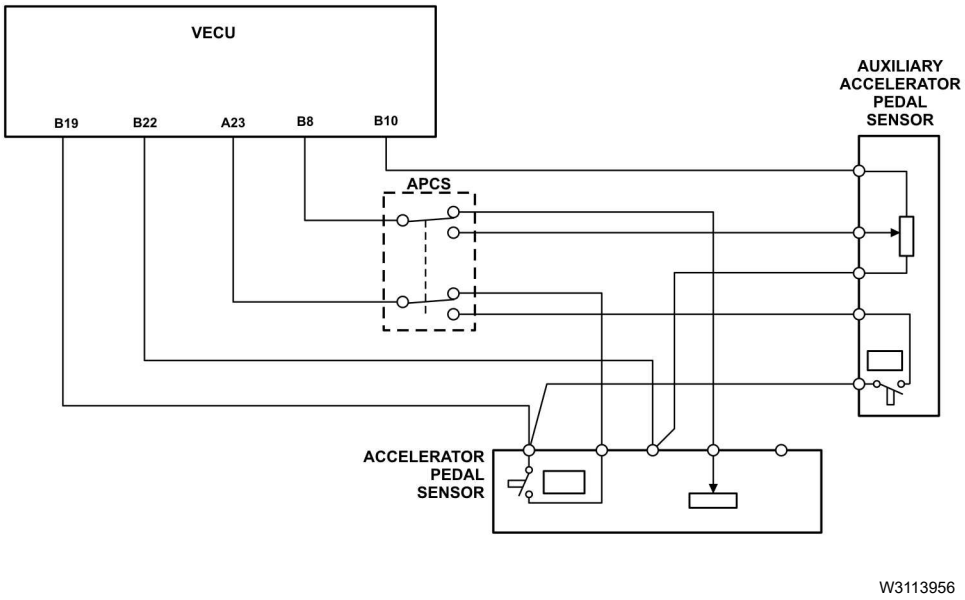

Fig. 6 Auxiliary Acceleration Pedal Signal

Note: Refer to “Auxiliary Acceleration Pedal Signal, Schematic Components” table for component ID(s) and descriptions.

Notes

All Rights Reserved

BodyLink III

BodyLink III is the standard Mack Granite straight truck body builder electrical interface. It consists of a 29-pin electrical quick-connector and grounding stud mounted just under the rear of the cab (near BOC). BodyLink III includes an electrical pin-out label. Also available with BodyLink III is a cab pass-thru between the seats. Note that the carpeting or floor mate is not cut at the factory to avoid unnecessary noise if not used. Also available is a 'BodyLamp' dashboard light to indicate typically when the dump body is elevated. This lamp is activated via pin #17 when grounded. Also available with BodyLink III is assignable (can be labeled) dashboard switches. These switches output via pins 8 to 14 on the BodyLink III connector. A female connector and pins are included with BodyLink III, typically supplied in the cab with the sales and service literature packets.

Note: The BodyLink III BOC connector is supplied with the mating connector housing and terminal pins from the factory. If additional pins or connectors are required, they can be purchased from your local Mack Dealer. The connector housing is 25177195 and the terminal kit is 21750652.

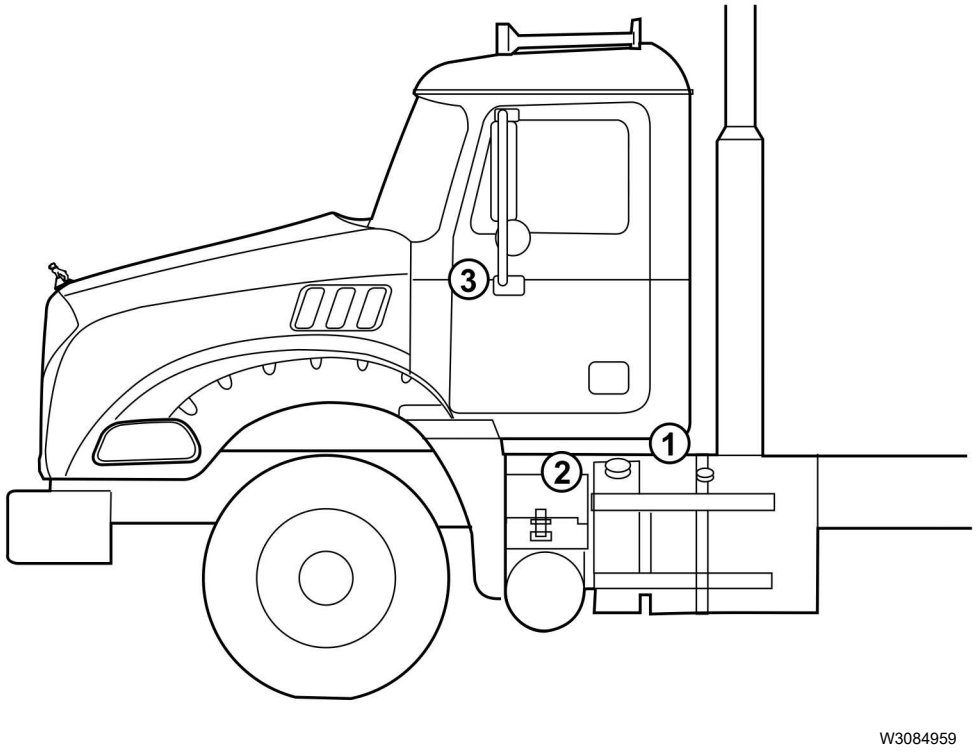

Fig. 7 Granite BodyLink III Components

1 BodyLink III Connector
2 Pass-Thru
3 Switch

All Rights Reserved

There is a new display in Co-Pilot to alert the driver that the body is up or out of position.

W8136998

Fig. 8 Body Raised Out of Position

Order Codes for Body Connections (Granite BodyLink III)

Item	Order Code	Model	Status	Description
BodyLink III w/Cab Pass-Thru	B83–0025	Granite and MHD Trucks	Standard	29-pin under-cab connector, BOC label, female connector, cab pass-thru.
BodyLink III w/o Cab Pass-Thru	B83–0026	Granite and MHD Trucks	Optional	Same as above without cab pass-thru.
Body Position Indicator Screen (Co-Pilot)	DIL-BOOP	Granite and MHD Trucks	Standard w/B83–0025B83–0026	Co-Pilot Warning Screen
Six (6) Assignable Body Builder Switches	AUXSW-6B	Granite and MHD Trucks	Optional	Six (6) assignable dashboard rocker switches w/ lenses (5 on-off, 1 momentary)

Notes

All Rights Reserved

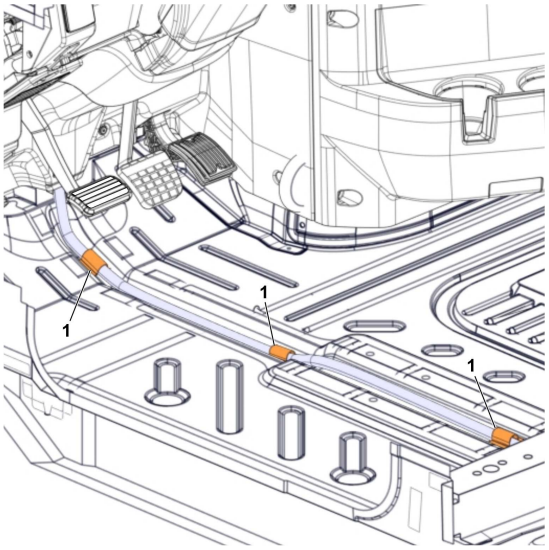

W3092527

Fig. 9 Granite BodyLink III Routing Beneath Driver's Seat

1 Rubber Adhesive Tape

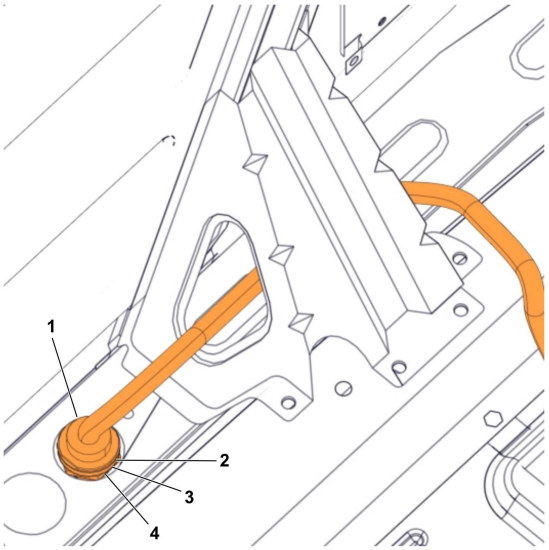

W3092528

Fig. 10 Granite BodyLink III Cab pass-through and Connector

1 Body Builder Harness
2 Gasket
3 Spacer
4 Nut, Panel

All Rights Reserved

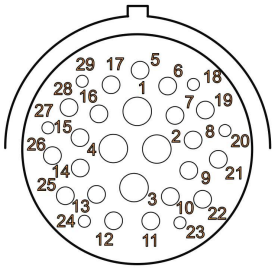

W3064928

Fig. 11 Granite BodyLink III 29-pin Connector, Wire Insertion Side of Connector.

Pin Chart for Granite BodyLink III 29-pin Connector

Pole	Description
1	Battery power (30A)
2	Ignition power (30A)
3	Stop lamp
4	Tail lamp
5	Reverse signal
6	LH turn
7	RH turn
8	AUX switch #1 (IGN)
9	AUX switch #2 (BATT)
10	AUX switch #3 (IGN)
11	AUX switch #4 (IGN)
12	AUX switch #5 (IGN)
13	AUX switch #6 (DOWN)
14	AUX switch #6 (UP)
15	Parking brake
16	NEUTRAL SIGNAL
17	Indicator switch (body lamp)
18 (12v positive)	PTO #1 – CA29
19 (12v positive)	PTO #2 – CB7
20 (12v positive)	Speed control ON/OFF
21	BB J1939 +
22	BB J1939 -
23 (12v positive)	Speed control SET/DECEL
24 (12v positive)	Speed control RESUME/ACCEL
25 and 26	-
27	LH Turn/Stop

All Rights Reserved

Pole	Description
28	-
29	RH Turn/Stop

Auxiliary Switch Locations (Cab)

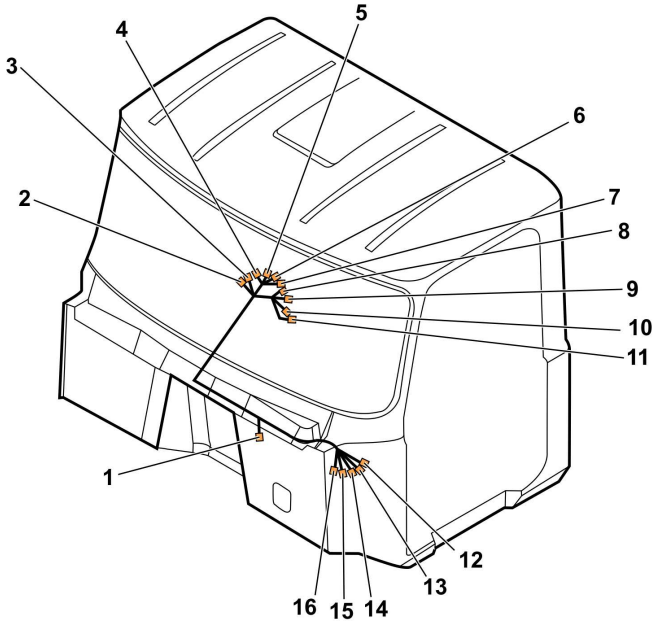

W3099971

Connector	Wire ID	Description
1	IGN_SP11[1]	Spare Ignition, Switch 4
2	-	-
3	ILLUM_OPT	Optional Illumination Connector
4	S026B	Switch 3, Ignition
5	S026C	Switch 4, Ignition
6	S026D	Switch 5, Ignition
7	S027B	Switch 6, Battery
8	ING_SP12	Spare Ignition, Switch 3
9	BAT_SP3	Spare Ignition, Switch 6
10	IGN_SP10 or BB_LP[2]	Spare Ignition, Switch 5
11	BB_LP_6SW_PLUG	-
12	MISC_2	Output, Switch 3
13	MISC_3	Output, Switch 4
14	MISC_4	Output, Switch 5

All Rights Reserved

Connector	Wire ID	Description
15	MISC_5	Output, Switch 6
16	MISC_6[3]	Output, Switch 6

1 If body builder wiring is specified, attach body builder wiring as follows: MISC_2 to BBSP_2, MISC_3 to BBSP_3, MISC_4 to BBSP_4, MISC_5 to BBSP_5, MISC_6 to BBSP_6. Otherwise, band all MISC connectors behind ABC panel.
2 If body builder wiring is specified, attach body builder wiring as follows: MISC_2 to BBSP_2, MISC_3 to BBSP_3, MISC_4 to BBSP_4, MISC_5 to BBSP_5, MISC_6 to BBSP_6. Otherwise, band all MISC connectors behind ABC panel.
3 Connect spare ignition and battery connector to main cab harness as follows: IGN_SP12 to IGN_SP1 or IGN_SP9, IGN_SP11 to BAT_SP4, IGN_SP10 to IGN_SP8 or BB_LP_PLUG, and BAT_SP3 to IGN_SP3.

Power Connections

Some judgment must be made for powering body equipment with the following trade-offs:

Ignition power – Will power off during engine crank, which may cause faults or other effects if power supplies inputs used by ECUs on EMS power. May also be disconnected for low voltage disconnect.

EMS Connections – Available with key off but may effect starter performance or be affected by starter power fluctuations.

Battery Connections – Always available but will contribute to key off battery drain as well as effect, and be affected by, starter as above.

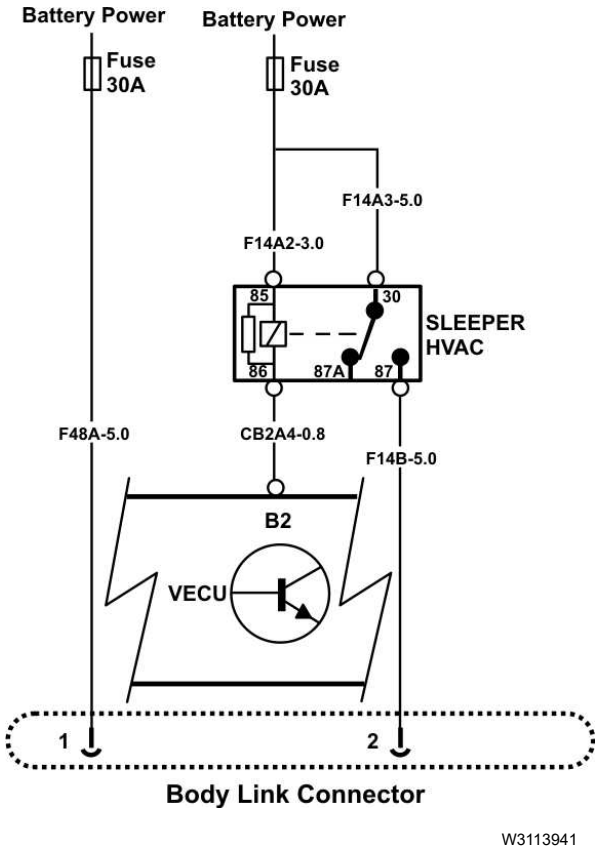

Fig. 12 Power Connections

Interrupted at ENGINE CRANK and LOW VOLTAGE DISCONNECT.

All Rights Reserved

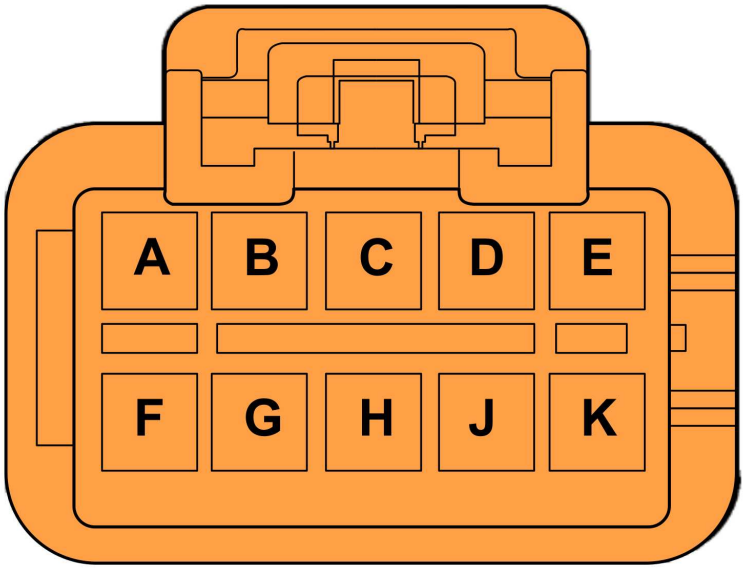

W3085103

Fig. 13 DCL Conventional

Locations for the DCL Conventional are:

LR – Driver side of Main Cab Wiring Harness near FRC (Fuse and Relay Centre)

TE/MRU – Mounted in the center electrical panel between the seats.

Conventional – Mounted under the ABS module taped to main harness.

DCL Conventional

Pin	Circuit Number	Circuit Function
A	CA17	PTO 4/CDS 2
B	CB21	PTO 3/CDS 1
C	CB7;CB7B	PTO 2
D	CB16	Spare Relay Control 2 (Controlled by VECU) CDS 2 out PTO 4
E	CB18	Spare Relay Control 1 (Controlled by VECU) CDS 1 out PTO 3
F	F17A18	Ignition Bus Feed
G	F18A	EMS Power 1
H	F17C3	Cruise SET/DECEL
J	F17D3	Cruise RESUME/ACCEL
K	N/A	Not Used

All Rights Reserved

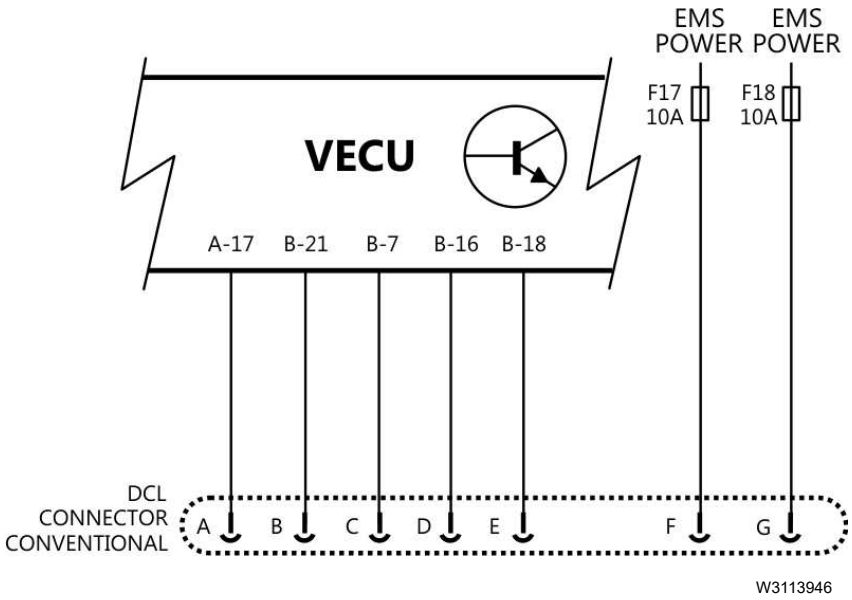

Fig. 20 Conventional DCL Connections

Notes

All Rights Reserved

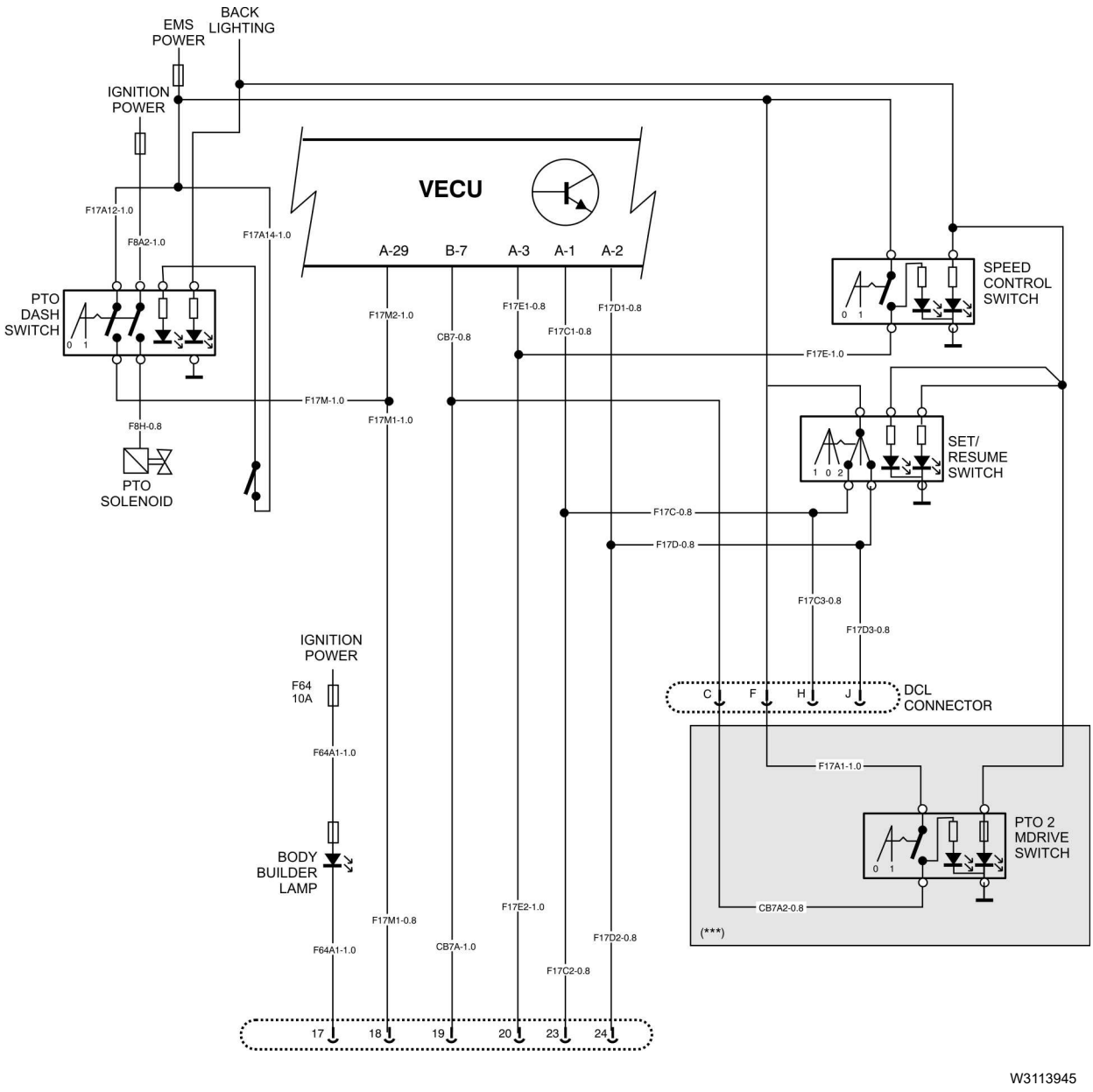

Fig. 14 PTO & Engine Speed Control Connections

Note: Shaded area *mDRIVE* Dual PTO only.

All Rights Reserved

Conventional Auxiliary Switches

Conventional Trucks have the option to place dashboard switches connected to outputs in the outside body connector.

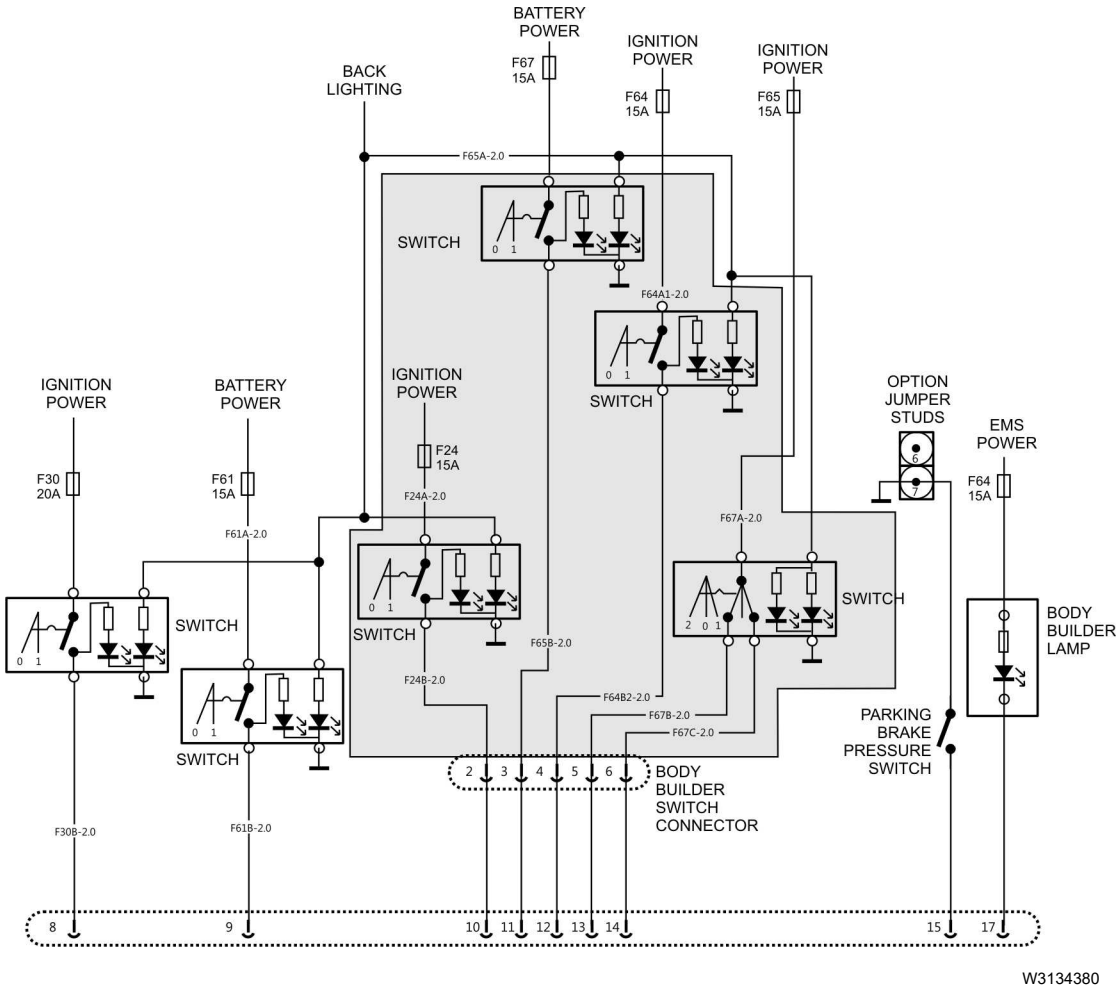

Fig. 15 Conventional Auxiliary Switches

Notes

All Rights Reserved

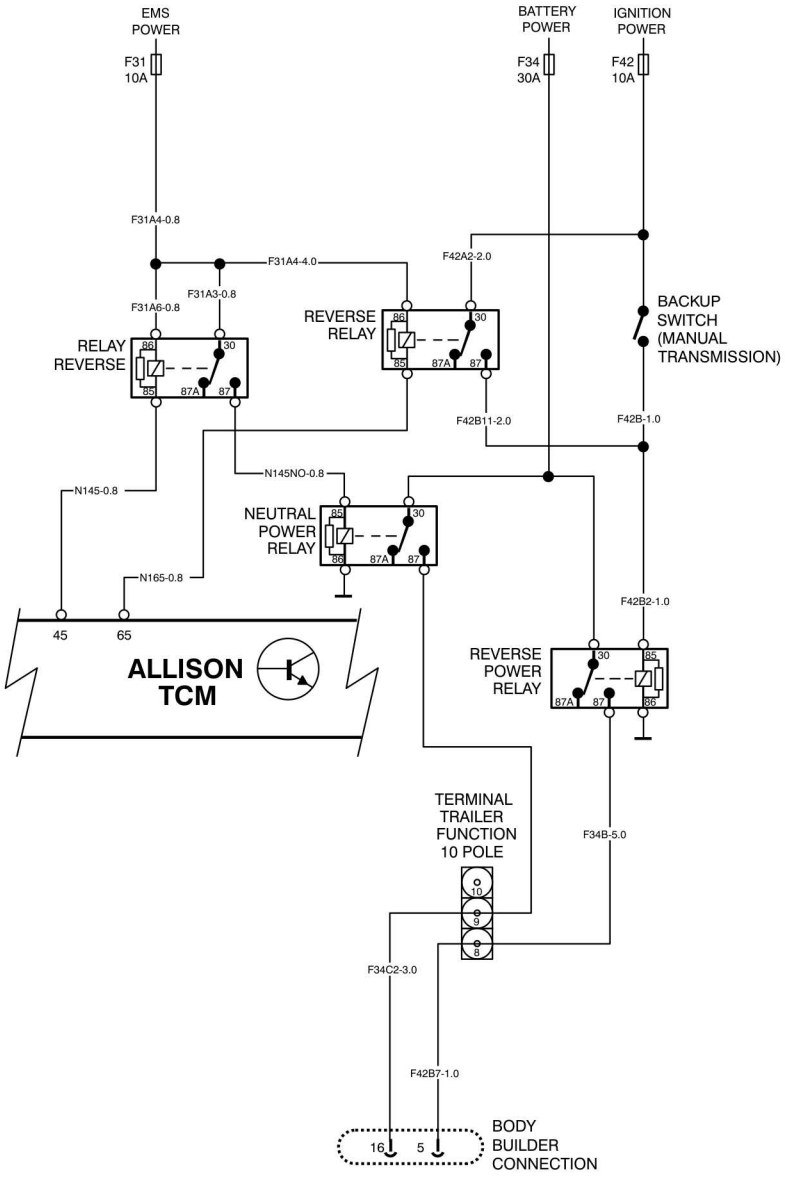

Fig. 16 Conventional — Reverse & Neutral Power

All Rights Reserved

Snow Plow with Extra Auxiliary Lamp

Granite (GR), Interior Generation ***II***

Note: Mack Trucks certifies that its vehicles comply with all applicable Federal Motor Vehicle Safety Standards for operation in North America at the time of initial vehicle build; however, Mack Trucks does not guarantee that a given vehicle complies with all individual State and Provincial regulations in the area that the vehicle is being operated. It is the responsibility of the customer and/or its Final Stage Manufacturer to ensure that the complete vehicle is compliant with all local regulations in the geographic area of usage.

With the introduction of the Mack Granite Generation **II** Interior and its many new options and conveniences over the previous Generation **I** Interior, a new LCM (Light Control Module) was introduced. This has affected how headlamps and fog lamps can be integrated into a vehicle for operation in different geographic locations as described in the Note.

This document contained the following information, which can be used by customers and their Final Stage Manufacturers to correctly configure headlamps and auxiliary lamps to allow their vehicle to comply with their appropriate State and Provincial regulations:

- Installation Instructions
- Part Number List
- Wiring Diagrams
- Wiring Harness Connection Matrix

Contact Mack Trucks Body Builder Support Group 877-770-7575 or visit “https://www.macktrucks.com/parts-and-services/support/body-builders/" for any support.

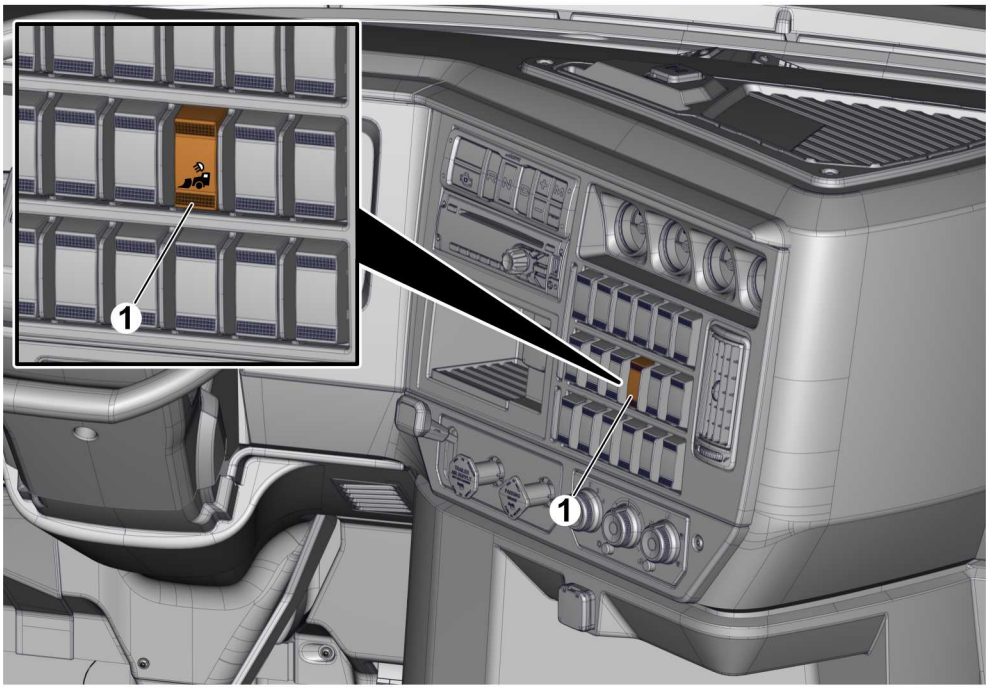

T3161927

1 Auxiliary lamp switch (snow plow)

All Rights Reserved

When a Granite truck is ordered with snow plow parameter set, the user can have fog lamp operational with snow plow low beam.

The snow plow auxiliary lamps are turned on/off using a switch in the dashboard. The stalk is used to switch between the high beam and low beam of snow plow auxiliary lamps.

The truck's fog lamps can be activated only with the snow plow lamps on low beam and turn off when the high beam is activated.

Routing and clipping of snow plow auxiliary light harness

Required parts

No	Part Number	Description	Quantity
1	23783544	Wires (dashboard overlay)	1
2	980464	Cable tie	16
3a	23785656	Wires (dog house overlay)	1
3b	23266504	Wires (EPDM pigtail jumper)	1
4	980464	Cable tie	2
5	84175248	Plate	1
6	25111125	Screw	4
7	20466164	Cable tie	2
8	25095012	Screw	2
9	25109882	Nut	2
10	23837889	Bracket	1
11	25109115	Screw	2
12	20706309	Lock nut	2
13	25110848	Mounting plate	1
14	980464	Cable tie	17
15	23783546	Wires (front chassis overlay)	1
16	980464	Cable tie	9
17	23734646	Wires (auxiliary lamp overlay)	1

Additional needed parts

Part Number	Description	Quantity
23387819	Auxiliary lamps switch	1
25095420	Washer	8
25089433	Nut	4
25092582	Screw	2
84755571	Plate (EPDM cover) **Note:** EPDM plate has to be changed to allow auxiliary lamp wires to pass through.	1

All Rights Reserved

25171506	Nut retainer **Note:** Nuts to secure EPDM plate can be reused if not damaged.	6
84755477	Gasket	1

Dashboard overlay

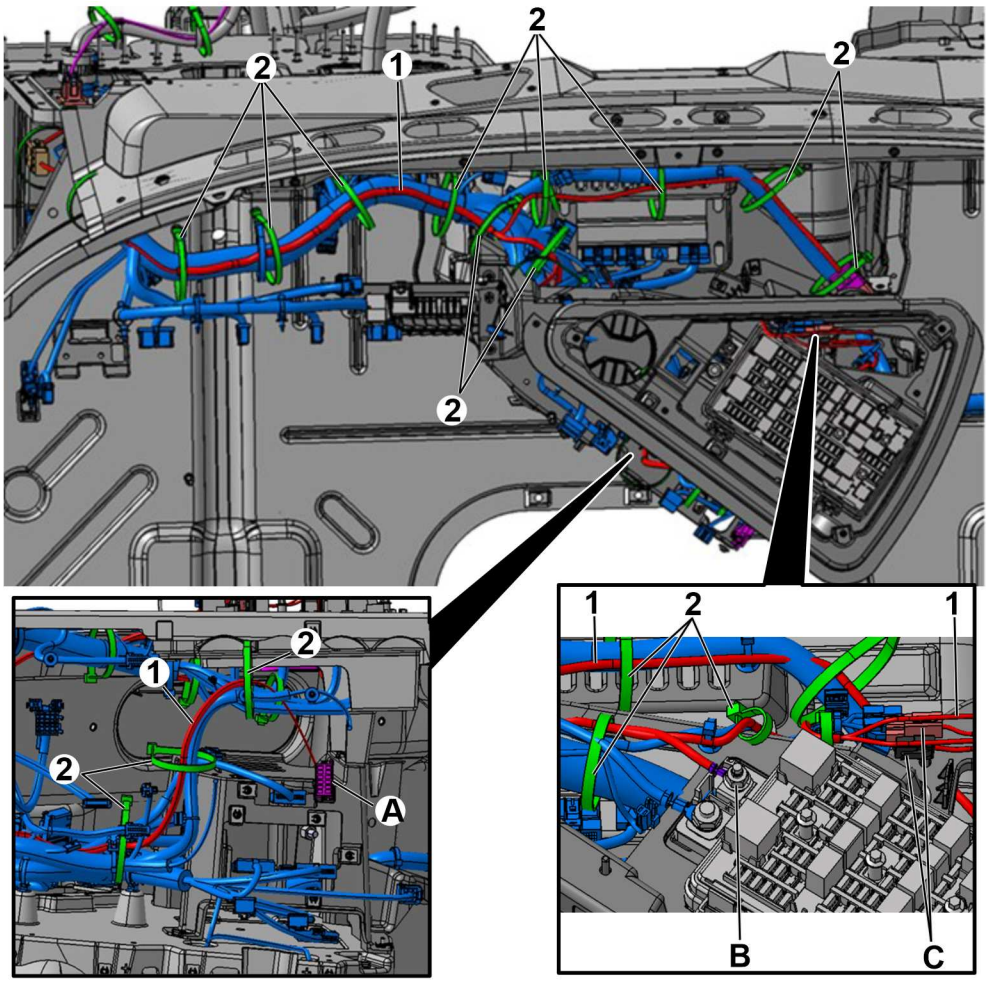

T3161288

A	The snow plow dashboard overlay harness (red) should follow and be cable tied to the main cab harness (blue)
B	Place the X41 ring terminal (labeled X41) on the dashboard overlay harness (red) on the positive stud on the FRC (fuse and relay centre). Torque to 140 in-lbs maximum.
C	Connect the X117_D connector (labeled ignition option) on the dashboard overlay harness (red) to the X117_D connector (labeled ignition option) on the main cab harness (blue). Take the extra X117_D that will be used as a spare ignition connection.
1	Wires (dashboard overlay - 23783544)
2	Cable tie (980464)

All Rights Reserved

Front of dog house

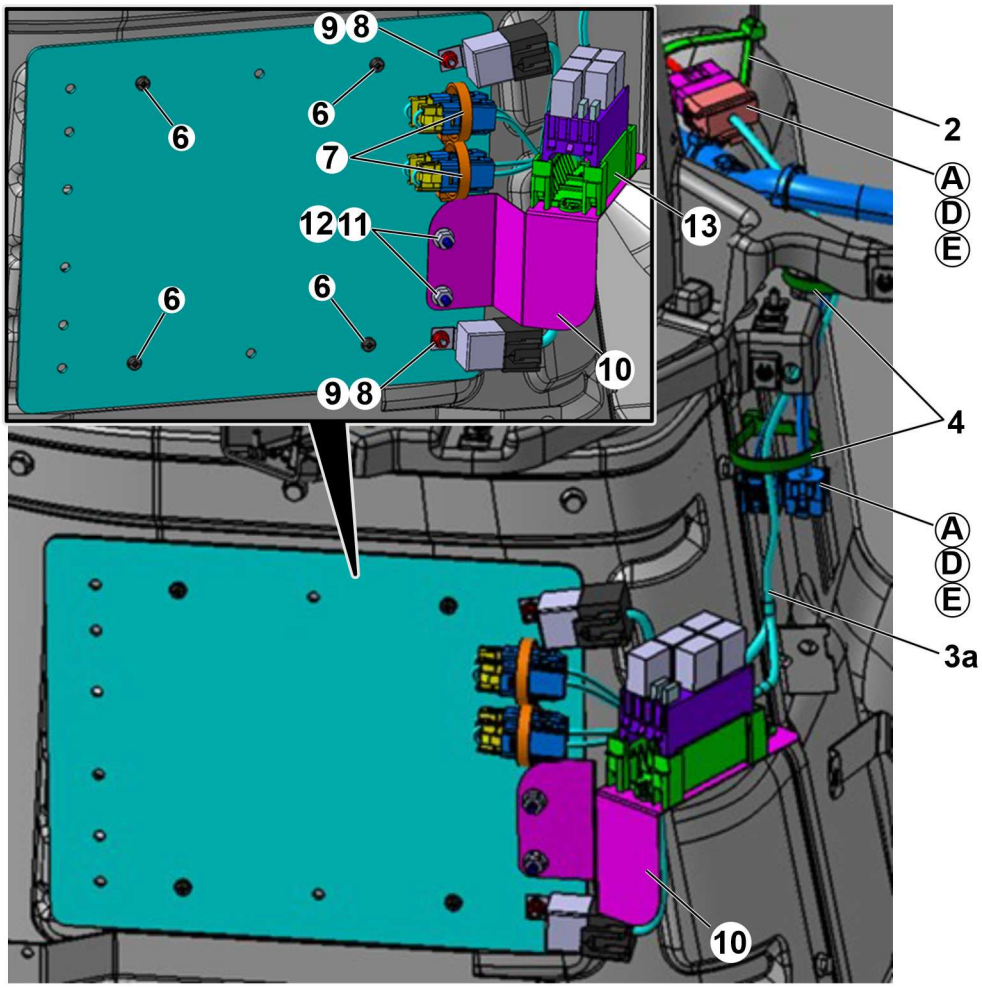

T3161293

A	The snow plow dashboard overlay harness (red) should follow and be cable tied to the main cab overlay harness (blue)
D	The connector labeled “DOG HOUSE” should connect to the dog house overlay harness (green)
E	The connector labeled “DOG HOUSE” should follow the main cab overlay harness (blue) and down to the relay and fuse connector base
2	Wires (dashboard overlay - 23783544)
3a	Wires (dog house overlay - 23785656)
6	Screw (25092582)
7	Cable tie (20466164)
8	Screw (25095012)
9	Nut (25109882)
10	Bracket (23837889)
11	Screw (25109115)
12	Lock nut (20706309)
13	Base connector module (25110848)

All Rights Reserved

EPDMP-A connector on LHS (left-hand side) of the steering column

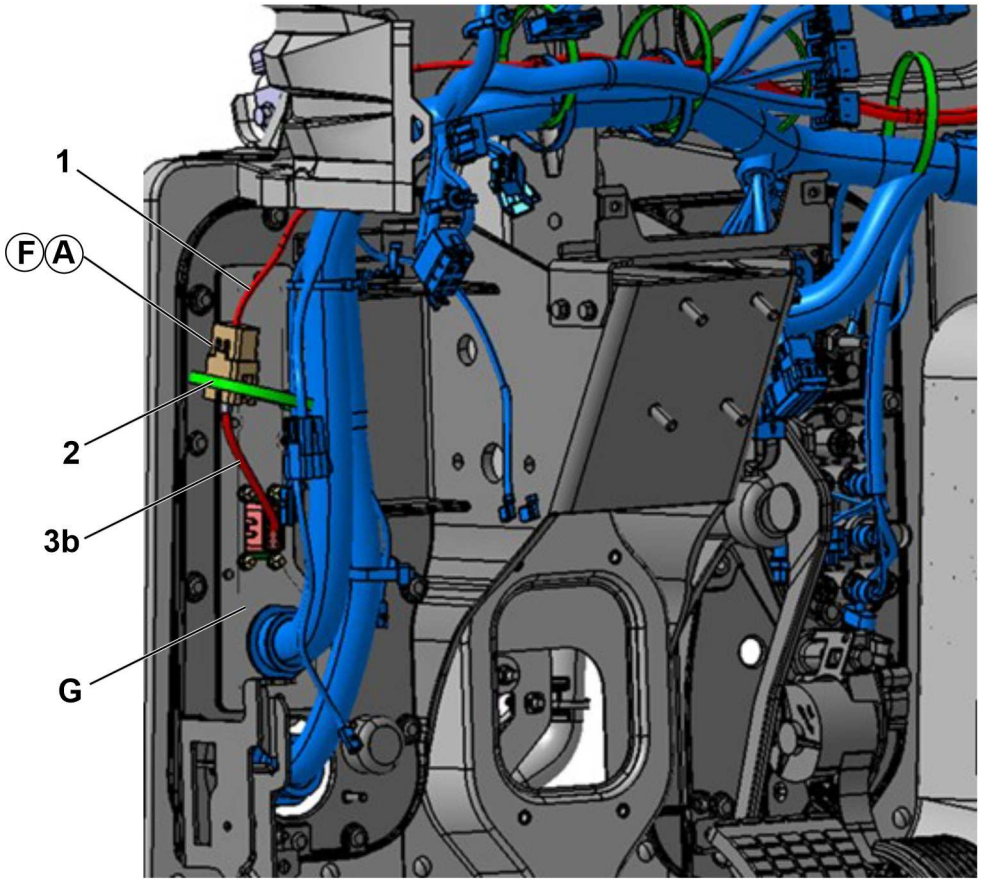

T3161290

A	The snow plow dashboard overlay harness (red) should follow and be cable tied to the main cab harness (blue)
F	Connect the EPDMP_A connector to the EPDMP_A pigtail jumper harness
G	Existing EPDM plate cover (82786099) has to be replaced with new EPDM plate cover (84755571)
3b	Wires (EPDM pigtail jumper - 23266504)
1	Wires (dashboard overlay - 23783544)
2	Cable tie (980464)

All Rights Reserved

Auxiliary lamps switch harness on the dashboard sheet

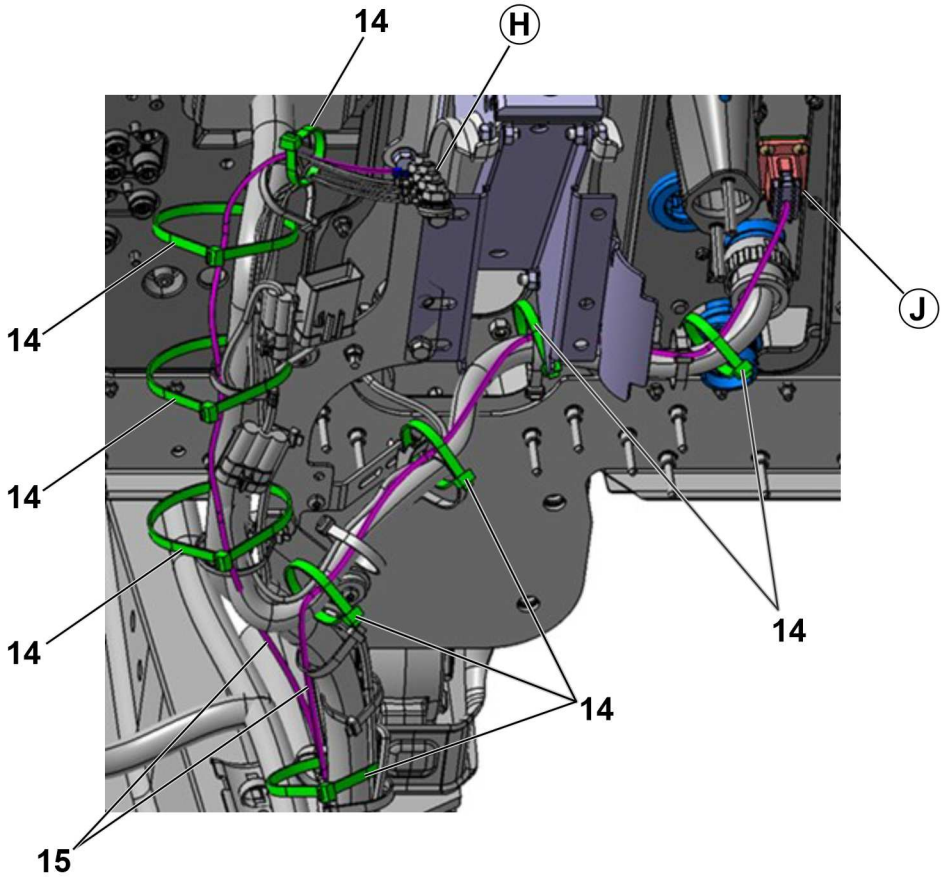

T3161289

H	The snow plow lamps chassis overlay harness (purple) should follow and cable tied to the front chassis harness (gray). The X209 ring terminal (labeled X209) on the snow plow lamps chassis overlay harness (purple) should be placed on the ground stud and torque tighten the nut to 100 in-lbs maximum.
J	The snow plow lamps chassis overlay harness (purple) should follow and cable tied to the front chassis harness (gray). Connect the EPDMP_B (labeled EPDMP) connector on the snow plow lamps chassis overlay harness (purple). The EPDMP_B connector is the pigtail jumper harness connector attached to the firewall.
14	Cable tie (980464)

All Rights Reserved

Snow plow lamps chassis overlay harness

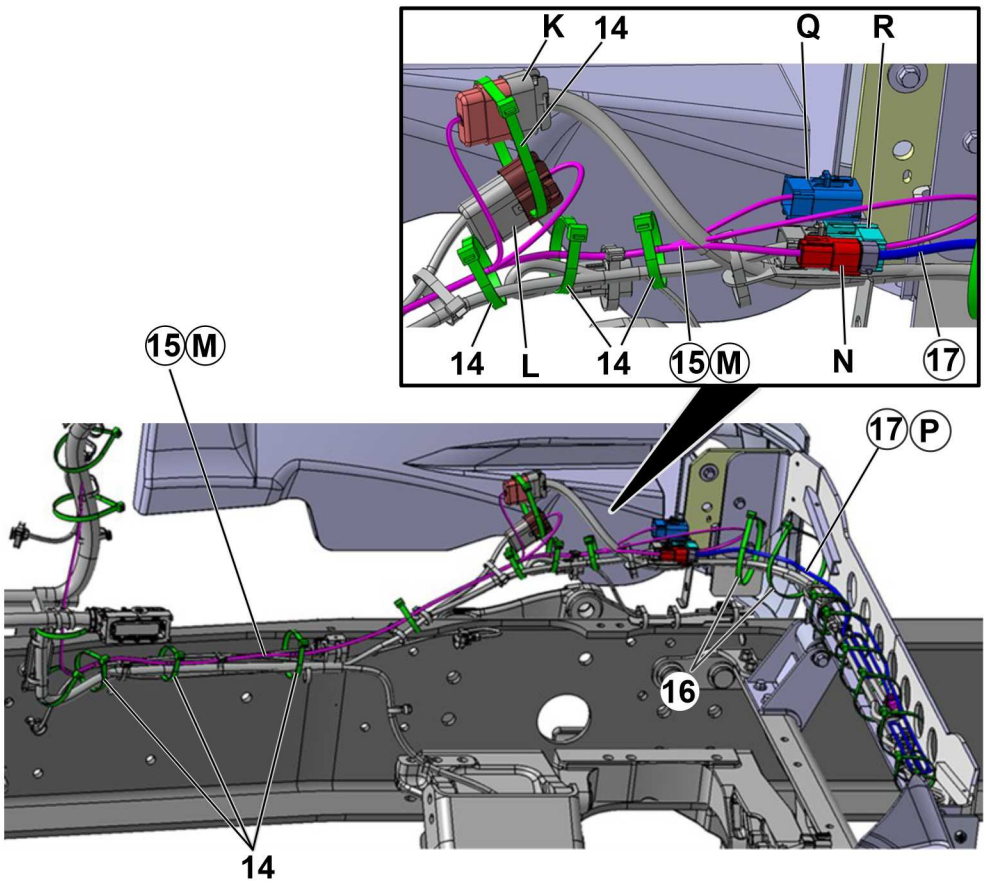

T3161291

K	Snow plow lamps connector (labeled : Plow lamps) connect to the snow plow harness connector.
L	The snow plow lamps connector (labeled: FC plow lamps) connects to the front chassis harness connector.
M	The snow plow lamps chassis overlay harness (purple) should follow and cable tied to the front chassis harness (gray).
N	Auxiliary lamp connector (labeled : AUX lamp) connect to the auxiliary lamp connector on the auxiliary lamp harness.
P	The auxiliary lamps chassis front harness (blue) should be connected to the snow plow lamps chassis overlay harness (purple) and cable tied to the front chassis harness (gray).
Q	Headlamp connector (labeled : Headlamp) connect to the headlamp harness connector.
R	Headlamp connector (labeled : FC headlamp) connect to the front chassis harness headlamp connector.
14	Cable tie (980464)
15	Wires (front chassis overlay - 23783546)
17	Wires (auxiliary lamp overlay - 23734646)

All Rights Reserved

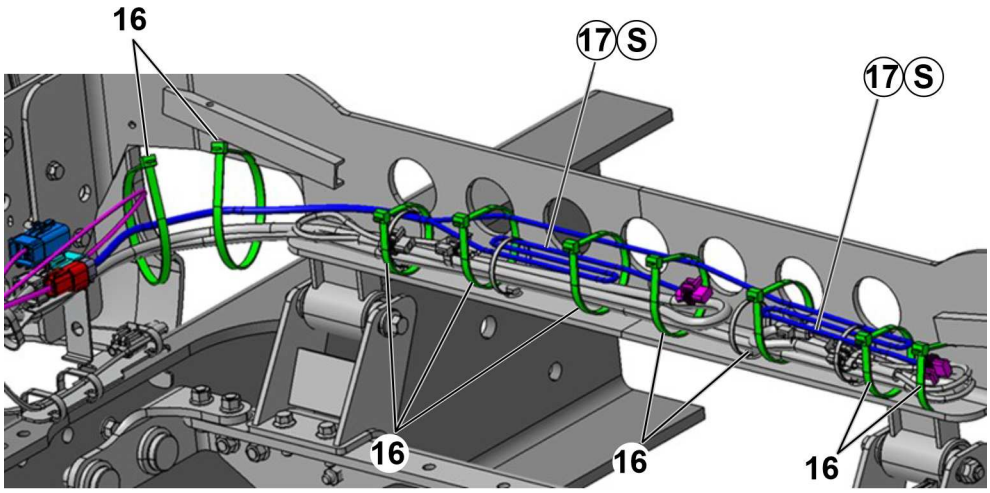

T3161292

S	The auxiliary lamps front harness (blue) should follow and cable tied to the snow plow hood harness. The excess harness should be bundled up and cable tied to the snow plow hood harness (gray).
16	Cable tie (980464)
17	Wires (auxiliary lamp overlay - 23734646)

Wiring connection matrix

Location of auxiliary lamps connectors

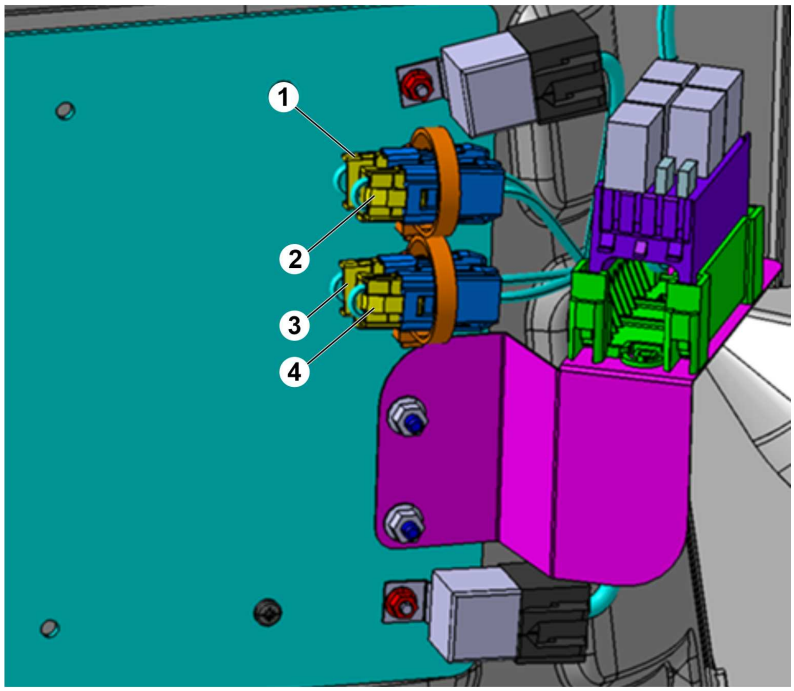

T3161340

1 Socket (Truck Lamps High Beam)
2 Socket (Truck Lamps Low Beam)
3 Socket (Plow Lamps High Beam)
4 Socket (Plow Lamps Low Beam)

The auxiliary lamps and headlamps sockets are mounted on the panel that is located behind the cup holder on the dog house cover. To access the panel, remove the cup holder.

All Rights Reserved

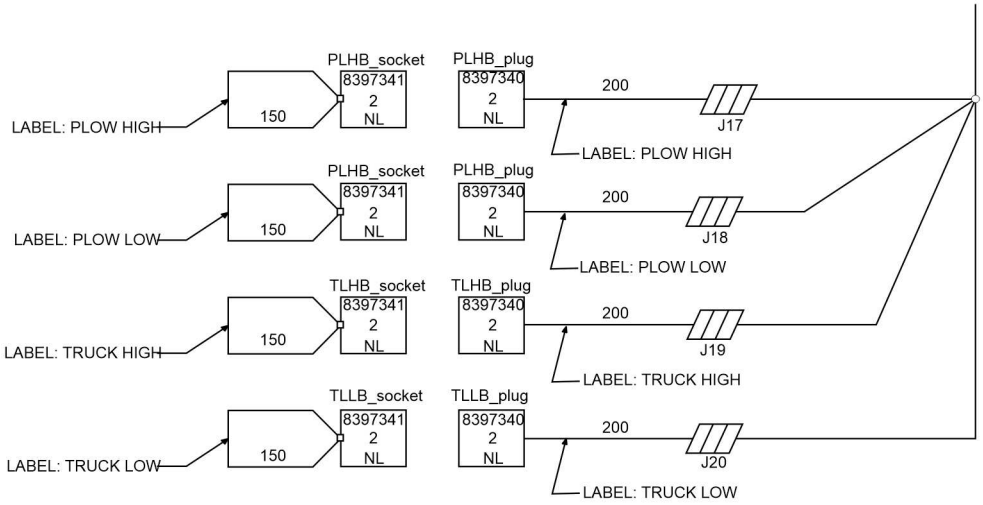

T3161341

PLHB	Plow Lamps High Beam
PLLB	Plow Lamps Low Beam
TLHB	Truck Lamps High Beam (headlamps)
TLLB	Truck Lamps Low Beam (headlamps)

Unplug the auxiliary lamps connectors to allow the headlamps to stay on in the application.

Note: Refer wiring diagram section of “Mack Conventional-Gen2-US17GHG” for the wiring schematics of "SNOW PLOW PREP W/ EXTRA AUX LIGHTS V2 (NJX-A9X)”.

All Rights Reserved

Control Link II

TE/MRU and LR feature standard “Control Link II” body builder electrical connections. Control Link II consists of two Deutsch HP-20 connectors, a 9-pin lighting connector along the frame rail, and a 29-pin electrical/electronic connector in-cab, typically located above the engine tunnel body in white”.

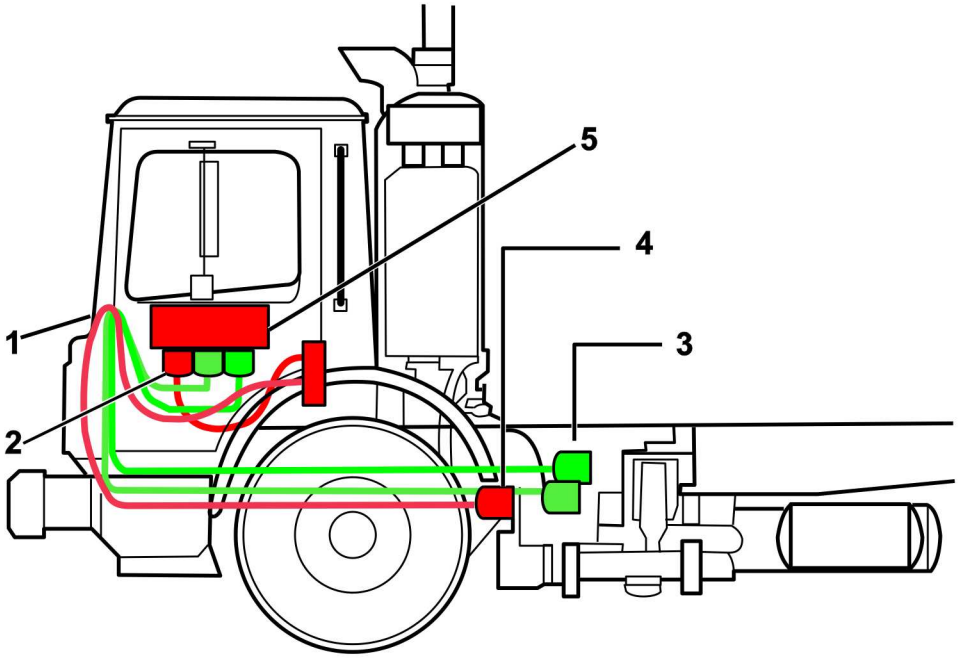

Fig. 17 Control Link II Components

1 Body Builder Cab Pass-Thru
2 29-pin Electrical/Electronic Connector
3 Refuse Body Builder Control Outputs
4 9-pin Lighting Connector
5 Body Builder Console (TE/MRU Only)

Order Codes for Body Connections (LCF Control Link II)

Item	Sales Code	Model	Status	Description
Control Link II Refuse System	B830030	TE/MRU, LR	Standard	29-pin Cab & 9-pin BOC Connections
Body Builder Console	M110003	TE/MRU	Included	Console Included w/ Control Link II
Body Power Only	B831018	TE/MRU	Optional	9-pin Back-of-Cab Power & Lighting Only
No Connectors	B830000	TE/MRU	Delete Option	Without Body Builder Quick Connections
Concrete Pumper Connectors	B831004/5/6/7	TE/MRU	Optional	Contact Sales Engineering

All Rights Reserved

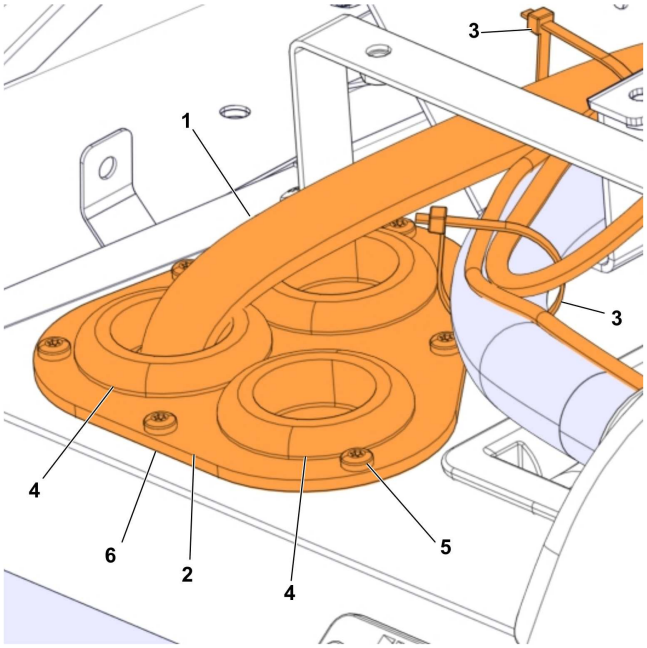

W3092642

Fig. 18 Body Builder pass-through area from cab to under-cab

1 Wiring harness
2 Bracket
3 Cable ties
4 Grommets
5 Screw
6 Electrical gasket

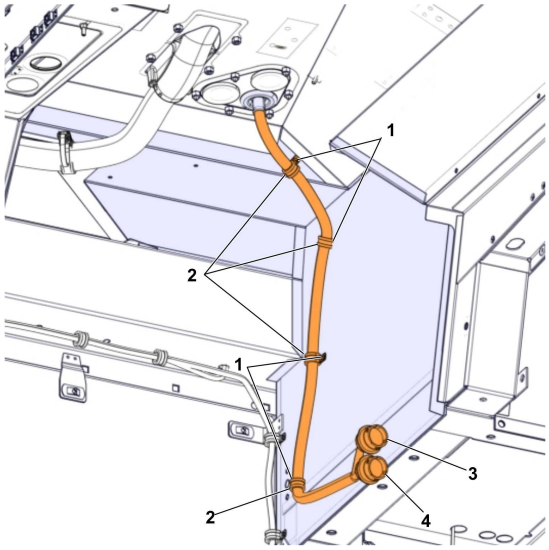

W3092641

Fig. 19 Body Builder pass-through area from cab to under-cab

1 Clamps
2 Clamps
3 Chassis clean power
4 Chassis body builder

All Rights Reserved

Body Builder Connections

LR Control Link II

The body builder connector can be accessed by removing the panels on the center console. The suggested routing path for upfitters is not a physical component provided with the vehicle. Its purpose in the illustration is to indicate the suggested wiring routes for upfitter harnesses. For convenience, MACK provides a pair of rubber grommets located behind the driver's seat. This is the pass-through area, which leads beneath the cab.

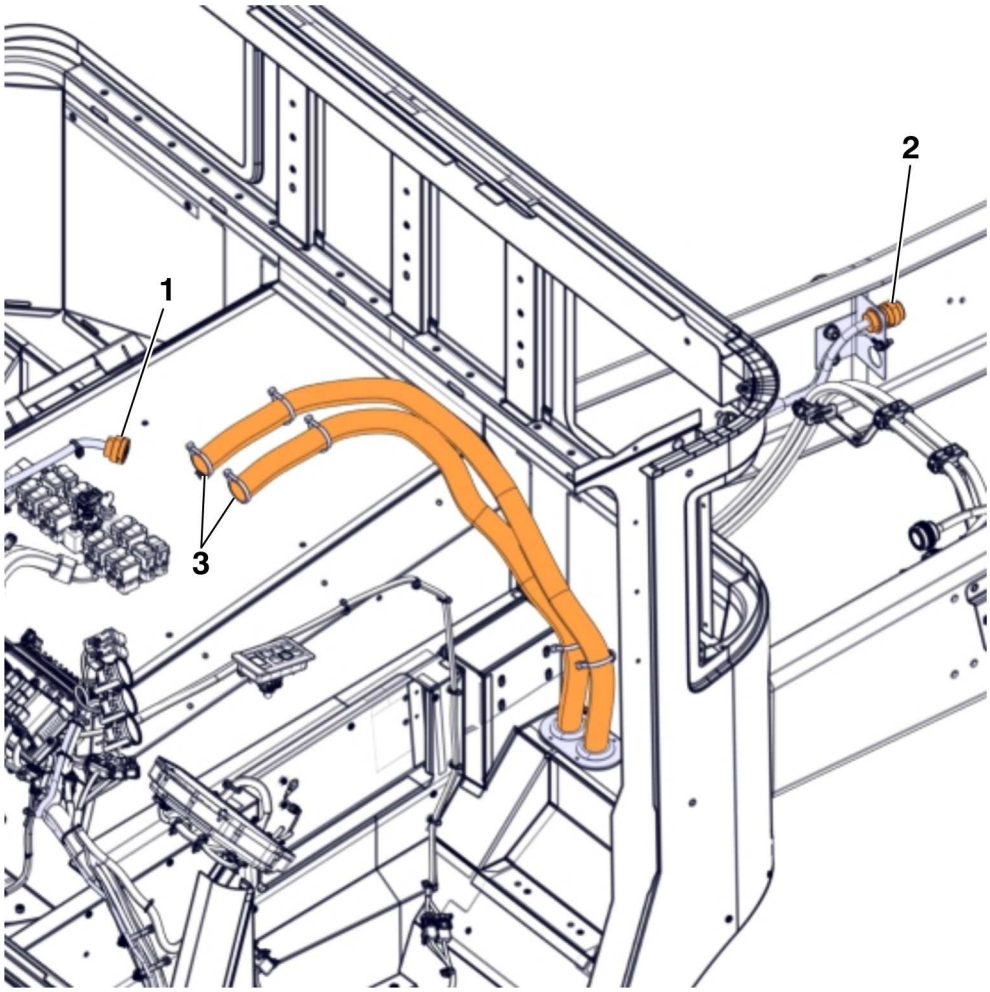

W9096945

1 29-pin Body Builder Connector
2 9-pin Lighting Connector
3 Suggested Harness Routing for Upfitters

All Rights Reserved

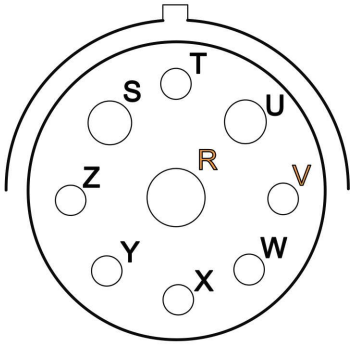

W3064929

Fig. 20 Control Link II, 9-pin Lighting Connector, Wire Insertion Side of Connector

Pin Chart for Control Link II 9-pin Lighting Connector

Pole	Wire ID	Description
T	F37B-3.0	Tail Lamp
Z	F4D3–3.0	RH Turn
Y	F33B-3.0	Stop Lamp
X	F4C3–3.0	LH Turn
W	F35B1–3.0	Clearance Lamp
V	F34C-3.0	Neutral Power
U	F34B2–5.0	Reverse Power
R	XM1–13.0	Clean Ground
S	F73A2–5.0	Clean Ground

Notes

All Rights Reserved

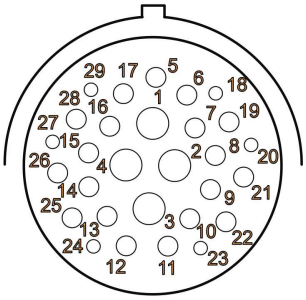

W3064928

Fig. 21 TE/MRU/LR/LEU Control Link II 29-pin Connector, Wire Insertion Side of Connector

Pin Assignments for TE/MRU/LR/LEU Control Link II 29-pin Body Builder Connector

Pole	Wire ID	Description
1	F39B–5.0	Ignition power (30A)
2	FABA-5.0	Battery power (30A)
3	F40B1–3.0	Ignition power (25A)
4	XABA-5.0	Clean ground
5	F42B1–1.0	Reverse signal
6–11	-	-
12	CA29–1.0	VMAC PTO# 1
13	CB7–1.0	VMAC PTO# 2
14	HA23–1.0	Engine rpm signal
15	N164–0.8	Transmission temperature signal
16	NA16–1.0	ECU ground
17	F18A1–1.0	Ignition signal
18	N145NO-0.8	Allison #145 (12 V)
19	X2A113–2.0	Cab ground
20	N143–0.8	Allison #143
21	DL5HB1–0.8	BBM J1939 (H)
22	DL5LB1–0.8	BBM J1939 (L)
23	N130NO-0.8	Allison # 130
24	N162–0.8	Allison # 162
25	N105-0.8	Allison # 105
26	N145B–0.8	Allison # 145
27	N103A-0.8	Allison # 103
28	N142A-0.8	Allison # 142
29	N117A-0.8	Allison # 117

All Rights Reserved

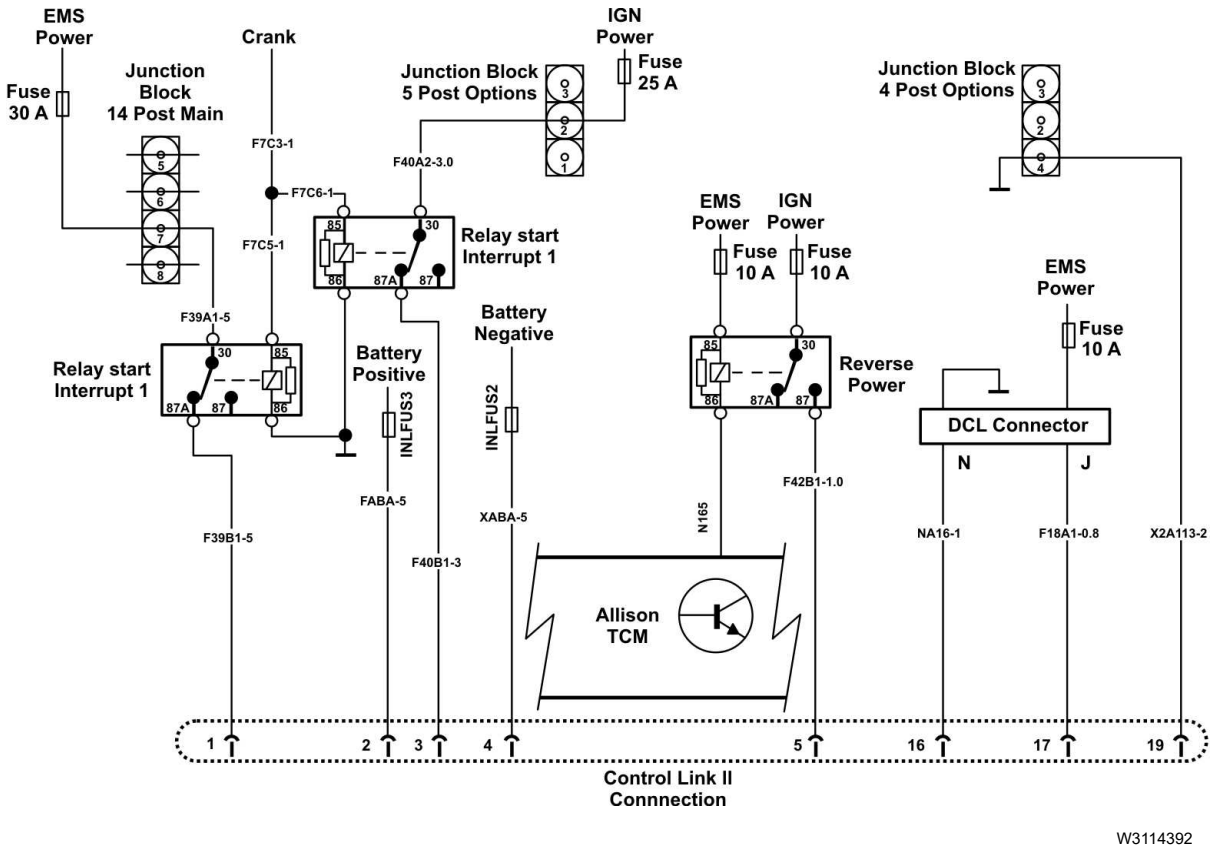

Fig. 22 Body Builder Power & Ground LR Control Link II

Notes

All Rights Reserved

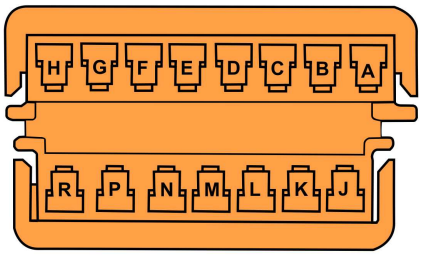

W3100110

DCL Connector (LR, TE/MRU) or Connector X21A (LR)

Pin	Description
A	Cruise ON/OFF Switch
B	Spare SW.3/PTO 3
C	PTO 2
D	VECU SW. Input
E	Cruise ON/OFF Switch
F	PTO 1
G	Deceleration
H	Acceleration
J	EMS Power 1 CB18
K	Spare Relay 2/PTO 4
L	Spare SW.2/PTO 4
M	Spare Relay 1/CDS 1 OUT/PTO 3 (TE/MRU Only; unused on LR)
N	Signal Ground
P	Ground
R	Engine Stop/Spare Switch

All Rights Reserved

TE/MRU/LR DCL Connections

Figures 18 and 21 show DCL connections, which are available on all Conventional models. Figures 16 and 22 show DCL connections for TE/MRU/LR. The availability of these is limited as they are used for *mDRIVE*, ACC, Aux Fan and other options. However, when available they can be used for more complicated controls such as secondary enable of engine speed control or as configurable PTO output.

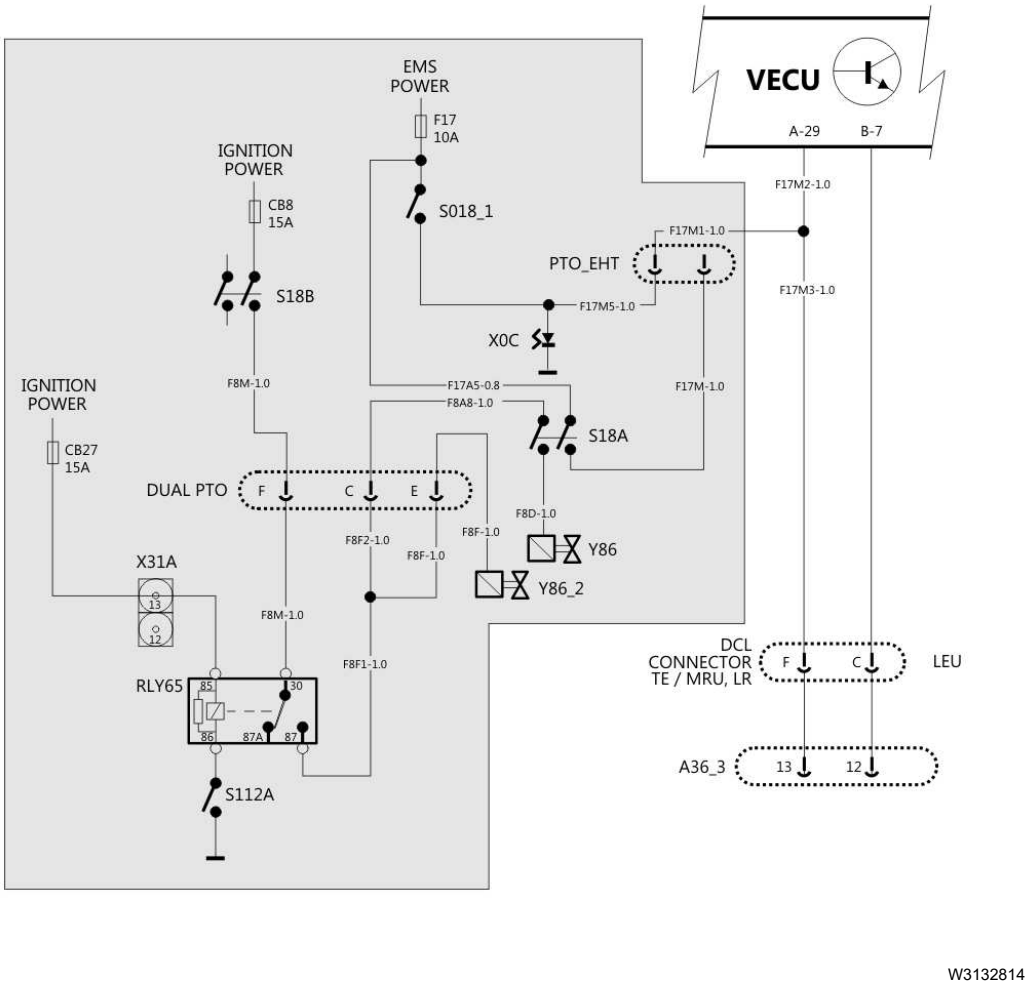

Fig. 23 DCL Connector

All Rights Reserved

Allison Connections

TE/MRU/LR Control Link II has many Allison connections included. Conventional Body Link does not. However, all trucks with Allison Transmissions include a connector (X06D) to access Allison functions directly.

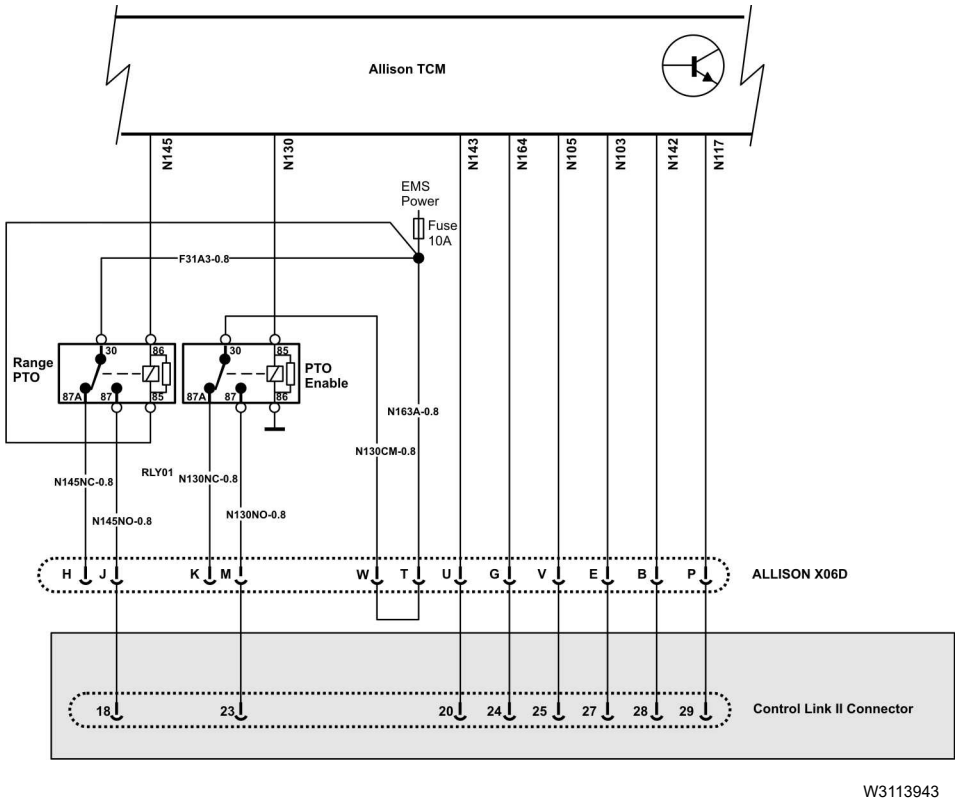

Fig. 24 Allison Connections — TE/MRU, LR Control Link II

Note: * Shaded section on TE/MRU/LR only

Notes

All Rights Reserved

PTO and Engine Speed Control Connections

TE/MRU and LR have several specific wiring options for PTO that don't necessarily affect engine speed control. However the control link II connection offers access to inputs to affect engine speed control based on PTO activation or other equipment inputs.

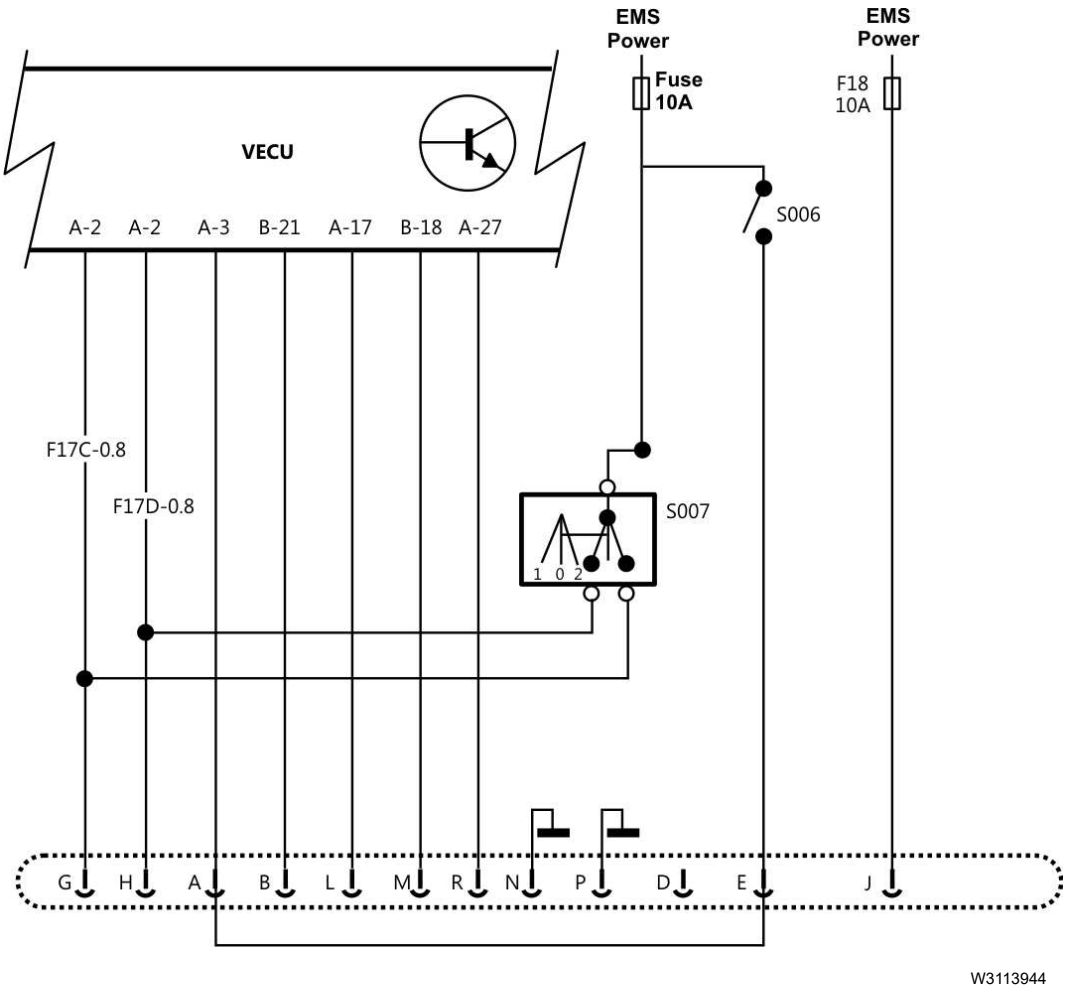

Fig. 25 PTO & Engine Speed Control Connections

All Rights Reserved

Lighting Connections

TE/MRU/LR Control Link II has lighting connections in a separate BOC connector whereas conventional has lighting connections in the Body Link connector, which is also BOC. These are nominally lighting outputs but can also be used for control. Note Neutral and Reverse are also in the TE/MRU/LR Control Link II connector.

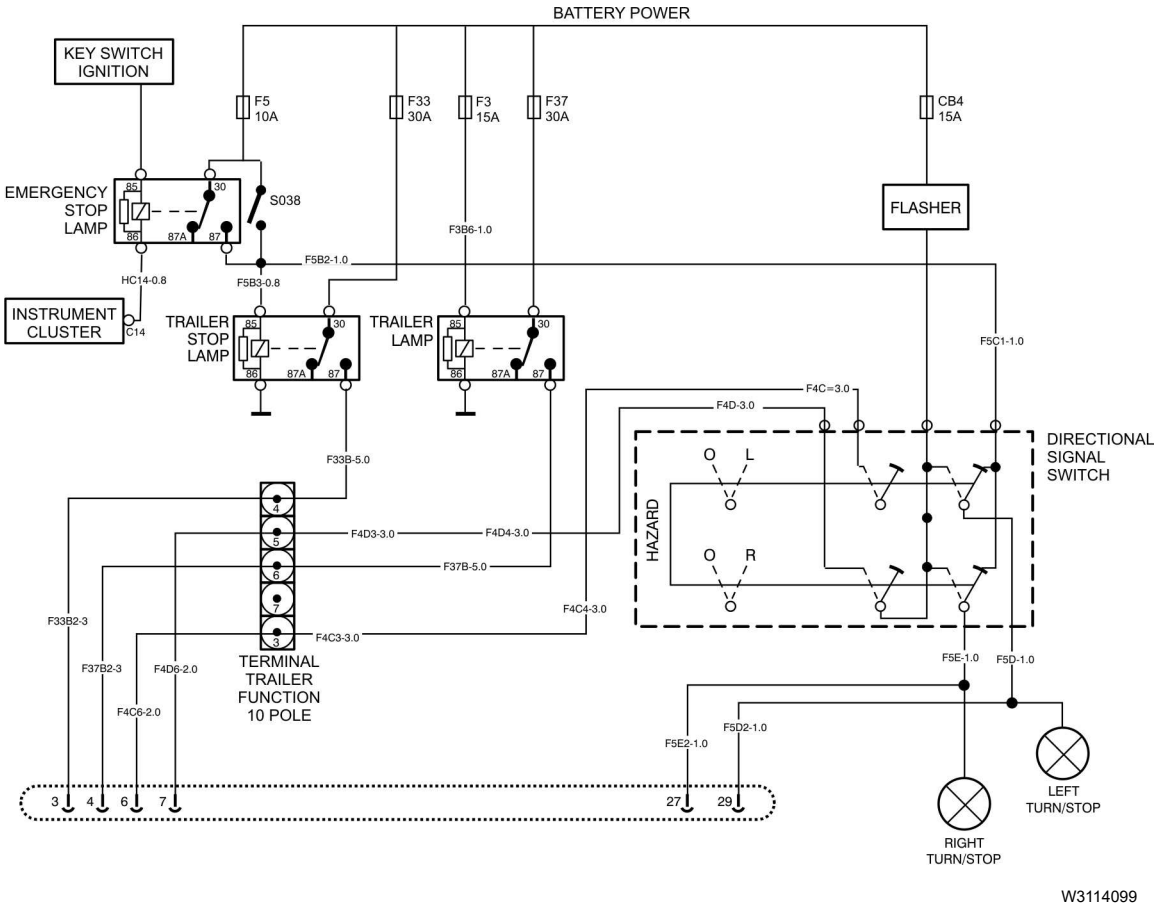

Fig. 26 Conventional Lighting Connections

Notes

All Rights Reserved

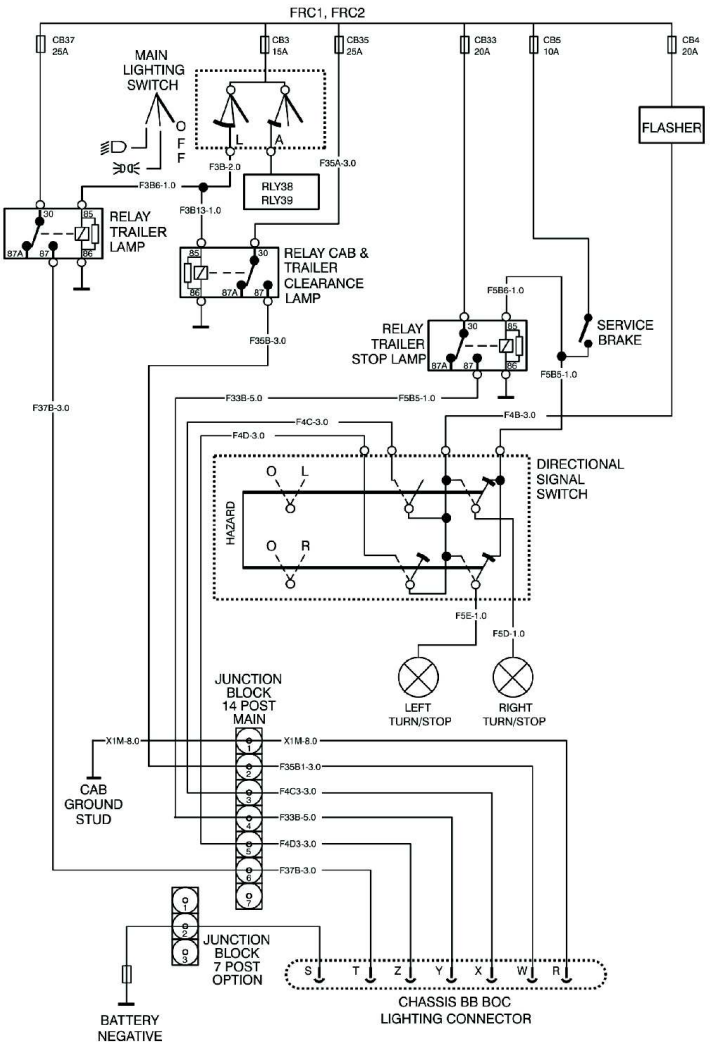

Fig. 27 TE/MRU/LR Lighting Connections

Notes

All Rights Reserved

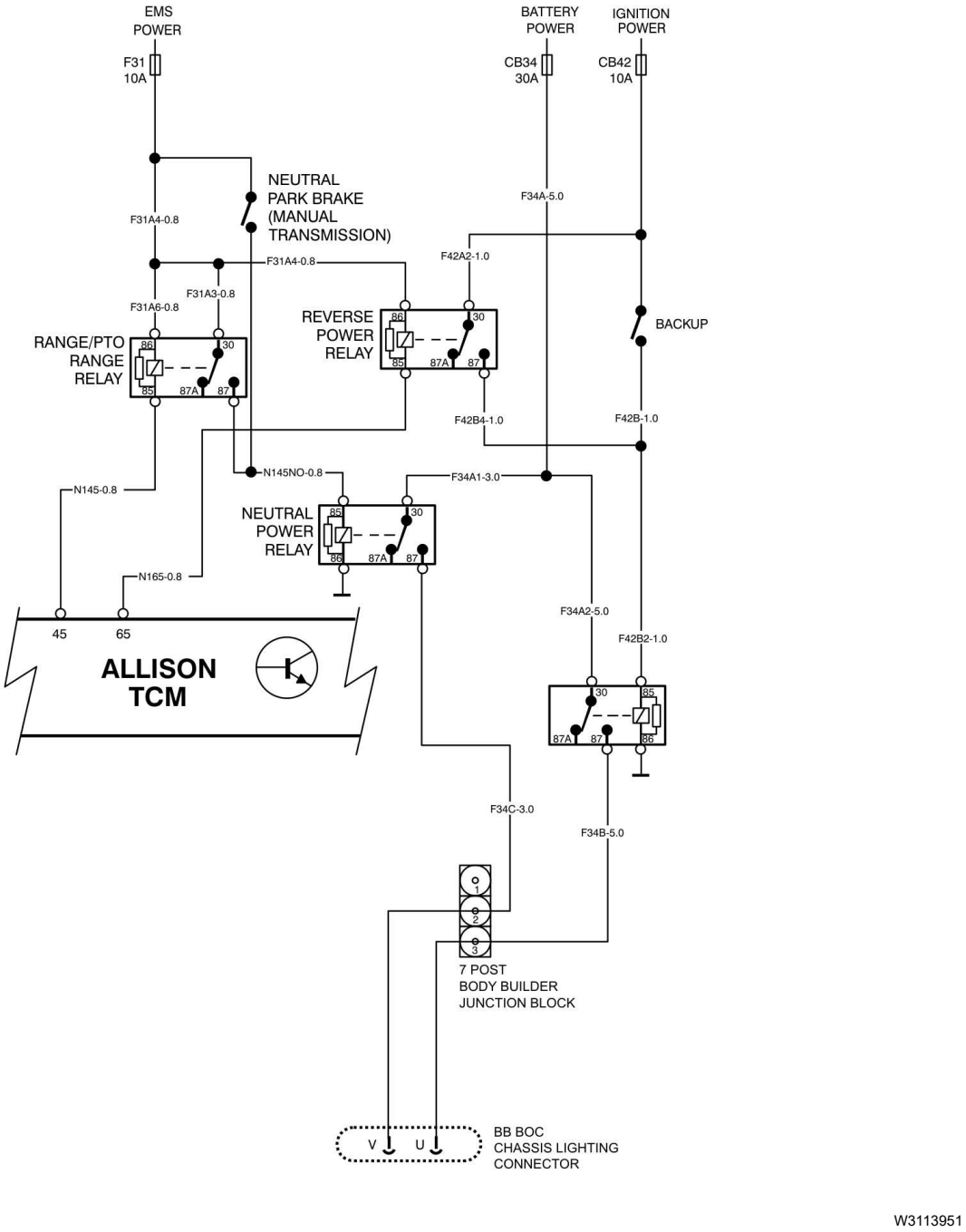

Fig. 28 TE/MRU/LR Lighting Connections – Reverse and Neutral

All Rights Reserved

W3136995

Fig. 29 RP170A Cab 31–Cavity Connector

Cavity Assignments for TE/MRU/LR/LEU 31-cavity Body Builder Connector

Cavity	Wire ID	Description
1	G02R1	(16ga) rpm
2	F24B1	(16ga) Reverse signal
3	F17M3	(18ga) PTO#2
4	CB7	(18ga) PTO#1
5	DL5HB2	(18ga) BBM J1939H
6	DL5HL2	(18ga) BBM J1939L
7	CB21	(18ga) Spare SW3/PTO#3
8	CA17	(18ga) Spare SW4/PTO#4
9	F56A1	(16ga) IGN POWER
10	F17E4	(18ga) Cruise control ON/OFF
11	F17C1	(18ga) Deceleration
12	F17D1	(18ga) Acceleration
13	BBA13A1	(18ga) PB switch
14	-	Spare
15	N130CM3	(18ga) Trans EMS power
16	N125	0.8MM, (18ga) SPEEDO
17	N103A	(18ga) Ground signal
18	N123	(18ga) Split shaft or neutral at stop
19	N143	(18ga) PTO request
Cavity	**Wire ID**	**Description**

All Rights Reserved

20	N122	(18ga) Pump mode type
21	N142A	(18ga) Auxiliary hold
22	N101	(18ga) Range inhibitor
23	N162	(18ga) Retarder temperature
24	N117A	(18ga) Auto neutral
25	N130NO	(18ga) PTO enable
26	N145B	(18ga) Range indicator
27	N105	(18ga) Overspeed indicator
28	N164A	(18ga) Transmission temperature
29	N145NO	(18ga) Neutral signal
30	F18A1	(18ga) IGN signal
31	-	Spare

All Rights Reserved

W3136996

Fig. 30 RP170A Chassis 14–Cavity Connector

Cavity Assignments for TE/MRU/LR/LEU 14-cavity Body Builder Connector

Cavity	Wire ID	Description
A:1	X4B1	(6ga) Ground to frame
A:2	F34B2	(14ga) Back up
A:3	F5E4	(16ga) Left stop turn
A:4	F5D4	(16ga) Right stop turn
A:5	F37B	(14ga) Tail/marker
A:6	F35B1	(14ga) Clearance
A:7	F33B	(14ga) Stop
A:8	-	Spare
A:9	-	Spare
A:10	-	Spare
A:11	-	Spare
A:12	-	Spare
A:13	F4C3	Left turn
A:14	F4D3	Right turn

All Rights Reserved

W3136997

Fig. 31 RP170A Chassis 8–Cavity Connector

Cavity Assignments for TE/MRU/LR/LEU 8-cavity Body Builder Connector

Cavity	Wire ID	Description
A	F61A2	(12 GA) Wire fed from CB61 (BATT+)
B	F39A3	(12 GA) Wire fed from CB11
C	F47A2	(14 GA) Wire fed from CB47
D	FABA	(12 GA) Wire fed from A230A fuse holder
E	F34B11	(12 GA) Wire fed from RLY62 (FRC2: J87)
F	X1M2	(12 GA) Wire fed from ground X1_C2
G	XABA	(10 GA) Wire fed from ground stud X136
H	X2A39	(12 GA) Wire fed from ground X4_C2

Notes

All Rights Reserved

LR Work brake

The Mack has a work brake, which operates pneumatically like a service brake. It is also tied into Allison inputs to effect a forced neutral. The Allison also has some conditions to allow switching driving positions so that loss of throttle and transmission control don't happen while moving.

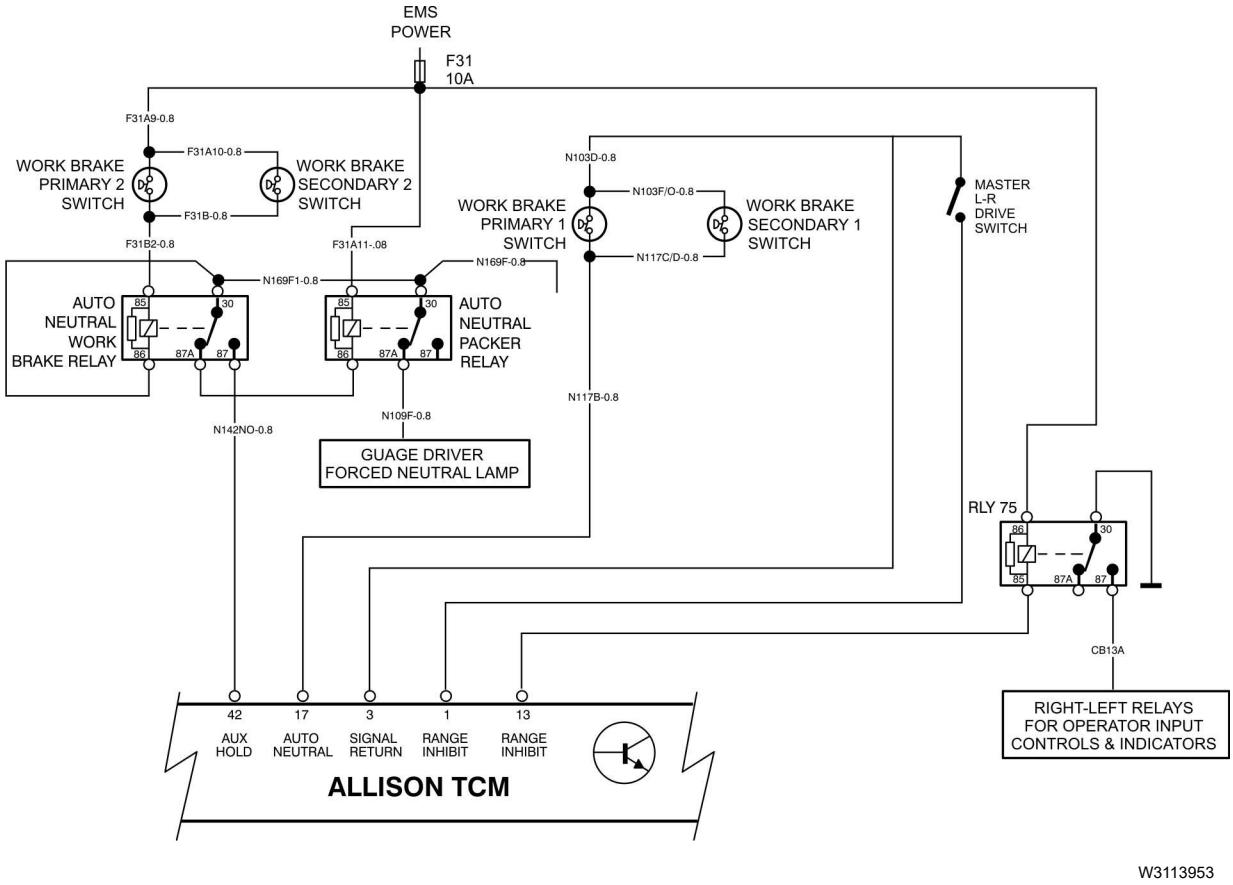

Fig. 32 LR Work brake

Notes

All Rights Reserved

Summary

Figure 31 shows examples of what the control pins could be used for in an application. The PTO inputs are programmable and can affect a conditional output, engine ramp, engine limits, etc. See programming section for details. Note that full safety evaluation of the system should be carried out. I.E., adequate interlocks should be programmed or wired, so that the engine will not accelerate in unintended situations. Interlocks can be done by powering switches using switched power (for example neutral power) or by software parameters or both. For example, most applications should only have the engine ramp using body controls when the parking brake is on and the transmission is in neutral. Exceptions should be carefully considered..

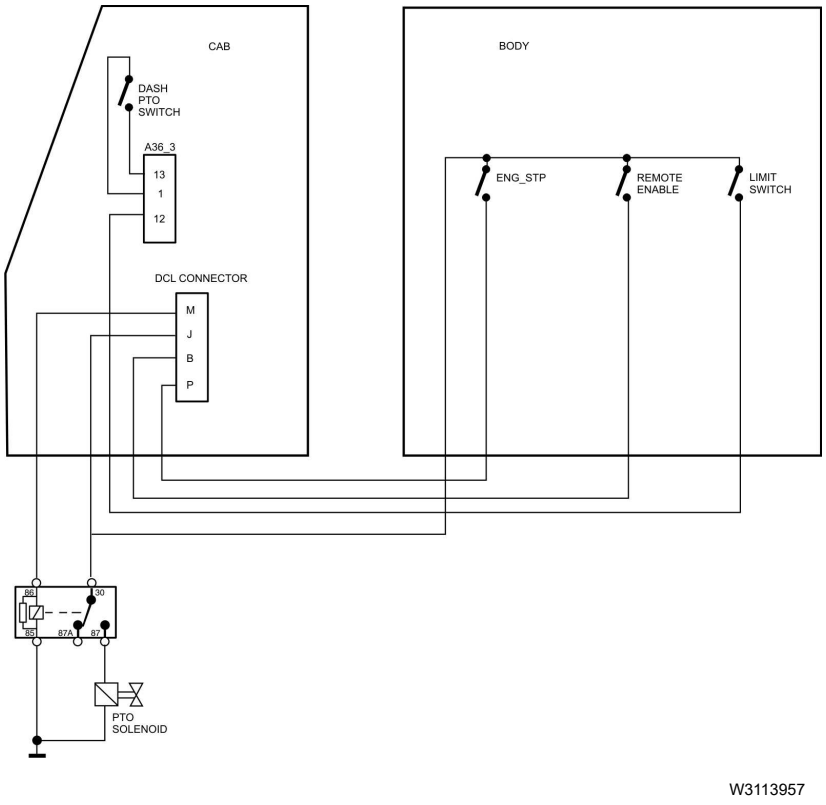

Fig. 33 Example TE/MRU showing Body Builder supplied wiring for Controls

Notes

All Rights Reserved

General

Data Link System

This section provides information on the design and function of the vehicle communications data links. These communication links are based on SAE J1587, J1708 and J1939 Recommended Practices and the ISO 14229 Standard. For more specific information about the ISO 14229 Standard, please refer to the ISO website (www.iso.org).

The data links are used to relay shared vehicle information between control modules and diagnostic, service and (in the case of on-board diagnostic (OBD) information) scan tools. The three data link types used are SAE J1939, SAE J1587/J1708 and ISO 14229.

SAE J1939

SAE J1939 is a communications link between stand-alone vehicle modules. This data link is commonly referred to as the “Control data link”.
It is used primarily to transmit control signals that are shared between other stand-alone modules. The information on the SAE J1939 control link is used for control functions. Fault messages or diagnostic information also transmits across this link. These control signals may be for, engine, transmission, brakes or a number of other vehicle control needs.
The J1939 operates at 250,000 bits per second, which is approximately 26 times faster than the J1708/1587 data link. This higher speed allows the system to operate at a faster sampling rate and higher resolution, thus being more capable of providing better control of vehicle functions.
The J1939 data link consists of a pair of 18 gauge unshielded twisted wires. The designations of the networks are CAN_H and CAN_L. The designation of the individual wires are DL1H that is yellow and DL1L that is green. The nominal rate of twist required is 0.89 twists per 25.4 mm (1 inch) or 33 twists per meter (3.28 feet). This twist helps protect against electrical interference.
The J1939 data link is electrically terminated at each end with a load resistor, which is commonly referred to as a termination resistor. Each J1939 network has two termination resistors associated with it. Only two termination resistors are allowed within a network. The termination resistor can be located external as part of the wiring harness, or integrated internally in the ECM. Any ECM that does not contain the termination resistor is referred to as a Type I, and an ECM that contains the termination resistor is referred to as a TYPE II. The correct number of termination resistors can be easily checked by measuring the resistance across cavities C and D of the 9-pin diagnostic connector or across cavities 3 and 11 for the 16-pin diagnostic connector. The correct resistance is 50 – 70 ohms. The terminating resistors should each have a resistance of 110 – 130 ohms when tested individually.

Note: It is important to remember which control units the vehicle is equipped with and which fault codes are stored in each control unit.

Do not splice into a V-MAC, ABS/ATC or any other electronic control unit harness.

Note: Do not cut or tap into the J1939 green/yellow twisted wires or any other wire or harness used on this vehicle. Use the provided connectors, and only add approved J1939 components with validated software. Failure to comply may result in personal injury or equipment damage. Any cutting, splicing, alteration or modification to the wiring will Void the Mack Trucks Warranty on the Electrical System.

Mack follows SAE J1939-15 meaning it uses an unshielded,
twisted pair and is theoretically limited to ten devices.

All Rights Reserved

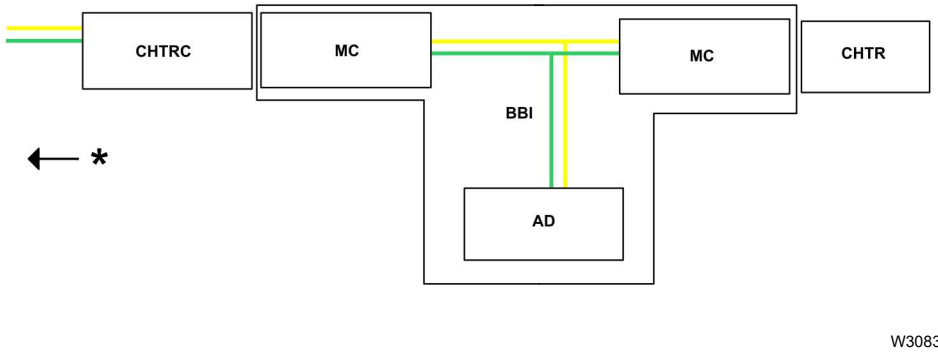

Fig. 34 Adding a Node at the Terminating Resistor

* To Truck

The following parts can be used in the above “T” harness. Critical is that only two terminating resistor remain on the network (one is in the ECM). It may also be possible to have one terminating resistor in the aftermarket device if it is replacing the terminating resistor.

T Harness Part Numbers

T Harness					
Abbreviation	**Connector**	**Part Number (New)**		**Part Number (Old)**	
		MACK #	**Delphi #**	**MACK #**	**Deutsch #**
CHTRC	Cab Harness Terminating Resistor Connector	21430472	13510085	3187784	DTM04-2P
CHTR	Cab Harness Terminating Resistor 120 Ω	21430457	15429045	25171700	DTM06-2S-P006
	Connection to Cab harness	20500398	13510099	3187782	DTM06-2S
AD	Aftermarket Device	N/A	N/A	N/A	
MC	Mating Connector	N/A	N/A	N/A	
BBI	Body Builder Installed	N/A	N/A	N/A	

All Rights Reserved

Vehicle Accessory Connector (Mack Conventional)

Note: Vehicle accessory connectors are applicable for vehicles built on or after Monday, September 07, 2020.

The purpose of vehicle accessory connector (TMC RP1226) is to connect the vendor device to the vehicle.

This connector provides an intuitive and quality assured interface between the vehicle and vendor device.

Location of the connectors

Two accessory connectors are located under the instrument panel. The connectors are used to connect the aftermarket Fleet Management devices. Only one vendor device is allowed to connect per connector.

Note: The vendor device must not have an internal termination resistor.

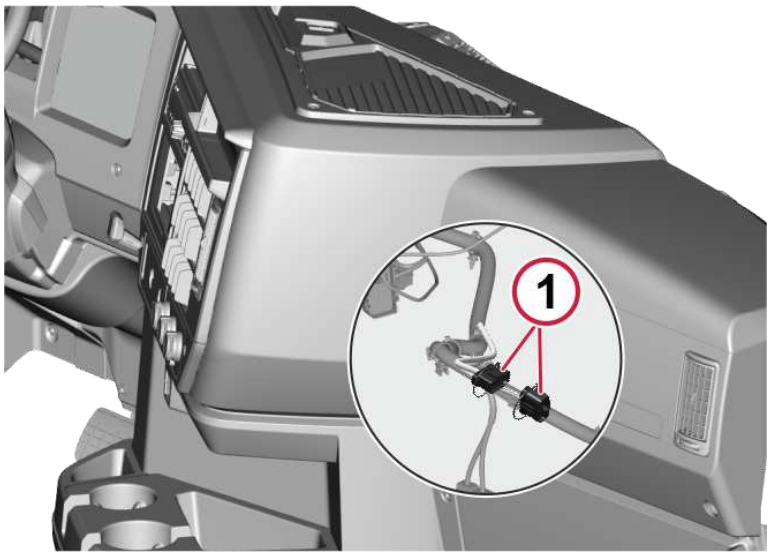

T3159519

TMC RP1226 Connector

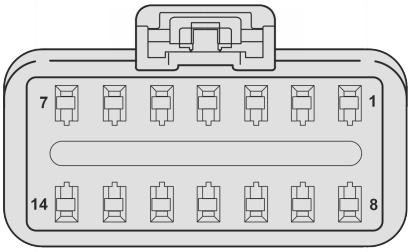

T3159520

Pin numbers	Description
1	+12 V After battery switch (10 A shared)
2	CAN-1 High
3	—
4	—
5	—
6	J1708A
7	+12 V After ignition (10 A shared)
8	Ground

All Rights Reserved

9	CAN-1 Low
10	—
11	—
12	—
13	J1708B
14	+12 V Battery (10 A shared)

Mating Connector

The following connector and terminals must be used, if the vendor component connector not suitable to connect to the TMC RP1226 connector.

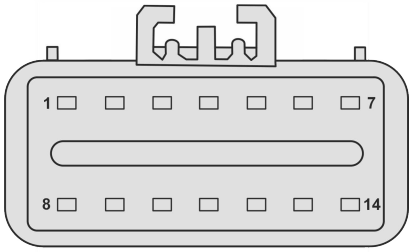

T3159741

Description	Part number
Mating connector	20734995
Terminals	21712912

ISO 14229

Note: ISO 14229 only applies to vehicles with MACK engines.

ISO 14229 is the Powertrain control link. The ISO is used for programming between the ECM, ACM and TCM. It is used primarily to transmit control signals that are shared between other stand-alone modules. The information on the ISO 14229 control link is used for control functions. Fault messages or diagnostic information also transmits across this link. These control signals may be for engine, transmission and aftertreatment ECUs.
The ISO 14229 operates at 500,000 bits per second. This higher speed allows the system to operate at a faster sampling rate and higher resolution, thus being more capable of providing better control of vehicle functions.
The ISO 14229 data link consists of a pair of 18 gauge unshielded twisted wires. The designations of the networks are CAN_H and CAN_L . The designations of the individual wires are DL2H and DL2L that are both white with orange stripes. The nominal rate of twist required is 40 twists per meter (3.28 feet). This twist helps protect against electrical interference.
The ISO 14229 data link is electrically terminated at each end with a load resistor, which is commonly referred to as a termination resistor. Each ISO 14229 network has two termination resistors associated with it. Only two termination resistors are allowed within a network. The termination resistor can be located external as part of the wiring harness, or integrated internally in the ECU/ECM. Any ECU/ECM that does not contain the termination resistor is referred to as a Type I, and an ECU/ECM that contains the termination resistor is referred to as a TYPE II. The correct number of termination resistors can be easily checked by measuring the resistance across cavities 3 and 11 for the 16-pin diagnostic connector. The correct resistance is 50 – 70 ohms. The terminating resistors should each have a resistance of 110 – 130 ohms when tested individually.

Note: It is important to remember which control units the vehicle is equipped with and which fault codes are stored in each control unit.

All Rights Reserved

SAE J1708/1587

Note: MACK engines and *mDRIVE* transmissions do not include the J1587/J1708 data link.

SAE J1708/1587 is a communications link between stand-alone vehicle modules. This data link is commonly referred to as the “Information data link”. It is used primarily to transmit shared information between these stand-alone modules. Fault messages or diagnostic information also transmits across this link. The J1708/1587 exchanges information with a data bus speed of 9600 bits per second. The J1708 defines parameters that relate primarily to hardware and basic software compatibility. The J1587 defines the actual data to be transmitted by particular modules. The J1587/1708 data link consists of a pair of 18 gauge twisted wires. The nominal rate of twist required is 1 twist per 25.4 mm (1 inch) or 40 twists per meter (3.28 feet). This twist helps protect against electrical interference. A fault in this data link can affect the transfer of information, and can make it difficult to communicate with the source in order to carry out tests using VCADS (found in the Premium Tech Tool or PTT). An indication that there is a problem with SAE J1708/1587 can be that faults from a certain control unit cannot be corrected, erased or reset.

Data Link Faults

W3005017

Whenever a data link fault is present, refer to Guided Diagnostics found in the manufacturer's scan tool (Premium Tech Tool or PTT) for diagnostic information.

Note: The ISO 14229 does not have FMIs. Instead this data link has failure type bytes (FTBs).

- The type of FMI/FTB that an individual electronic control unit (ECU) can monitor depends on the software in the ECU. All FMIs/FTBs cannot be recognized by all ECUs.
- The ECU reporting the diagnostic trouble code (DTC) may not be the ECU that is involved at the site of the specific failure. For example, The engine control module (ECM) may report a data link fault that is actually at the vehicle electronic control unit (VECU). The VECU would not be able to report if the data link is broken between the VECU and data link backbone.

All Rights Reserved

Data link Topology

US2010 Emissions Engine plus OBD2013

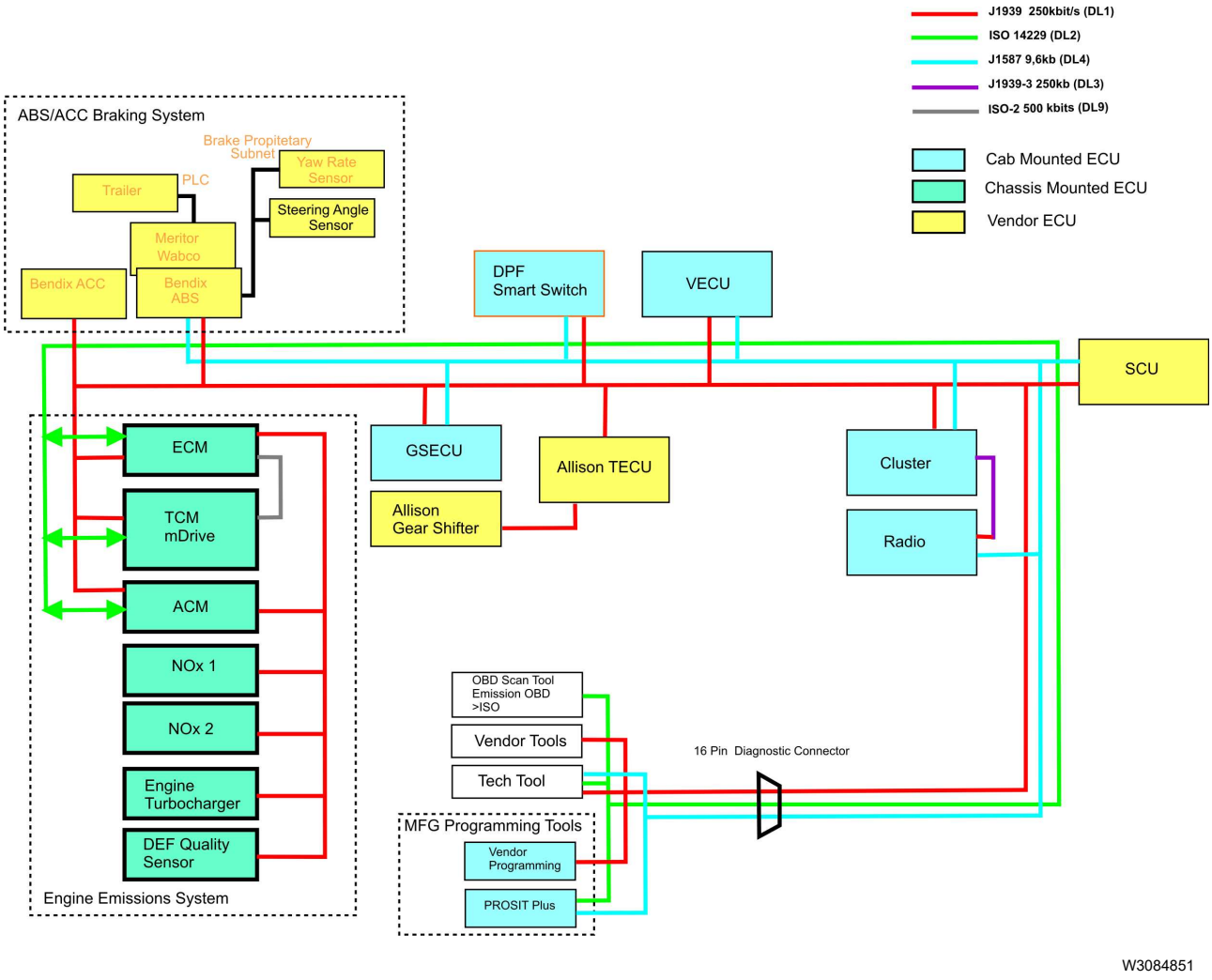

Acronym	Description
ECM	Engine Control Module
ACM	Aftertreatment Control Module
NOx	Nitrogen Oxide
GSECU	Gear Selector ECU
TCM	Transmission control unit
DEF	Diesel Exhaust Fluid
ACC	Active Cruise Control
VECU	Vehicle ECU
ABS	Anti-lock braking system
BBM	Body Builder Module
SCU	Satellite Control Unit (Qualcomm)

All Rights Reserved

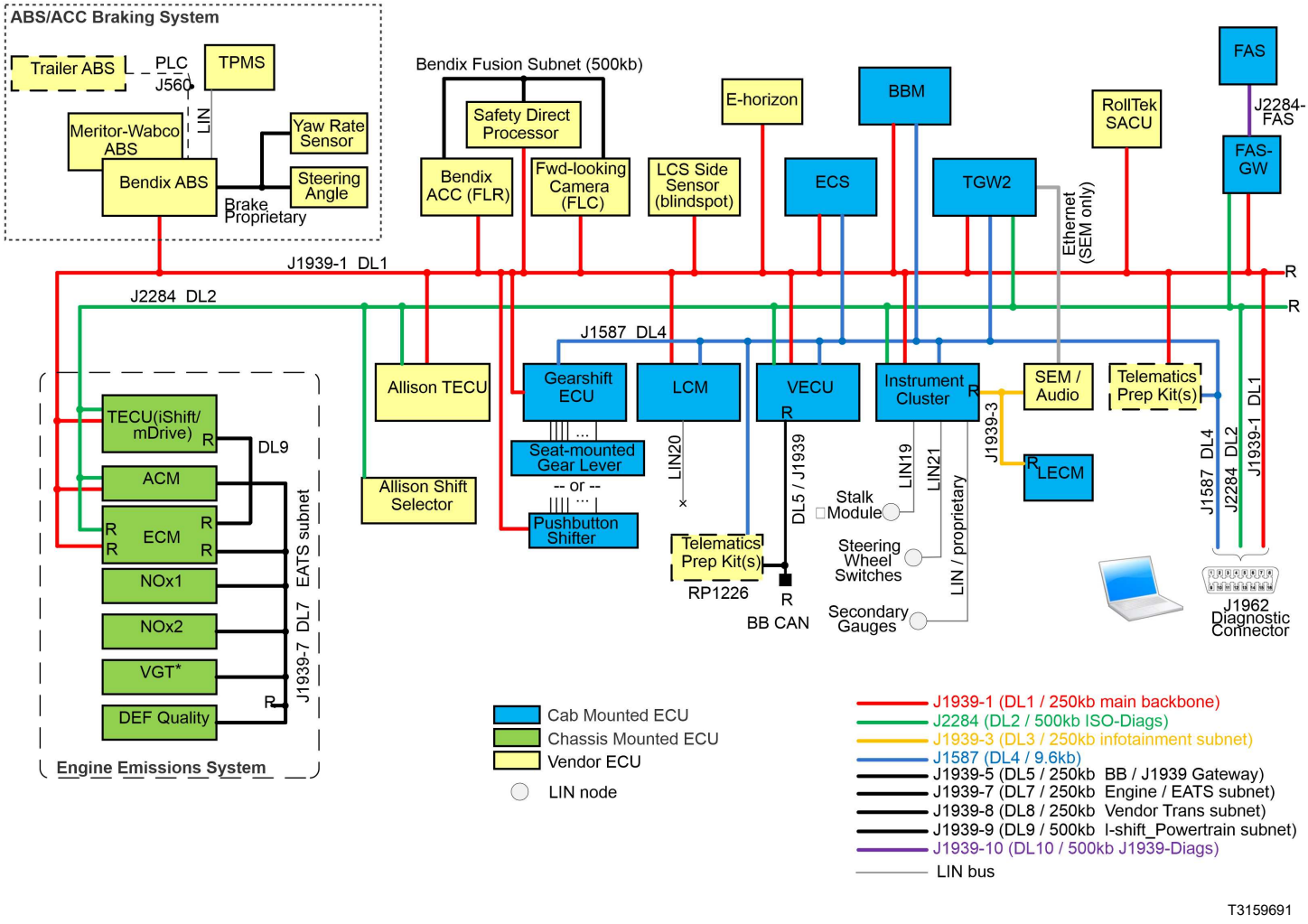

*VGT is not applicable to 13 L TC (turbocompound) Engine

Acronym	Description
ABS	Anti-lock braking system
ACC	Adaptive Cruise Control
ACM	Aftertreatment Control Module
BBM	Body Builder Module
CAN	Control Area Network
DEF	Diesel Exhaust Fluid
ECM	Engine Control Module
ECS	Electronically Controlled Suspension
FAS	Front Active Steering
FAS-GW	Front Active Steering Gateway
FLC	Forward Looking Camera
GSECU	Gear Selector ECU
LCS	Lane Change System

All Rights Reserved

Acronym	Description
LCM	Light Control Module
LECM	Living Environment Control Unit
LIN	Local Interconnect Module
NOx	Nitrogen Oxide
SACU	Seat Adjustment Control Unit
SCU	Satellite Control Unit (Qualcomm)
SEM	Services and Entertainment Module
TECU	Transmission Electronic Control Unit
TGW2	Telematics Gateway2
TPMS	Tire Pressure Monitoring System
VGT	Variable Geometry Turbocharger

Mack Cab over Trucks: US2017 Emissions Engine plus OBD2018

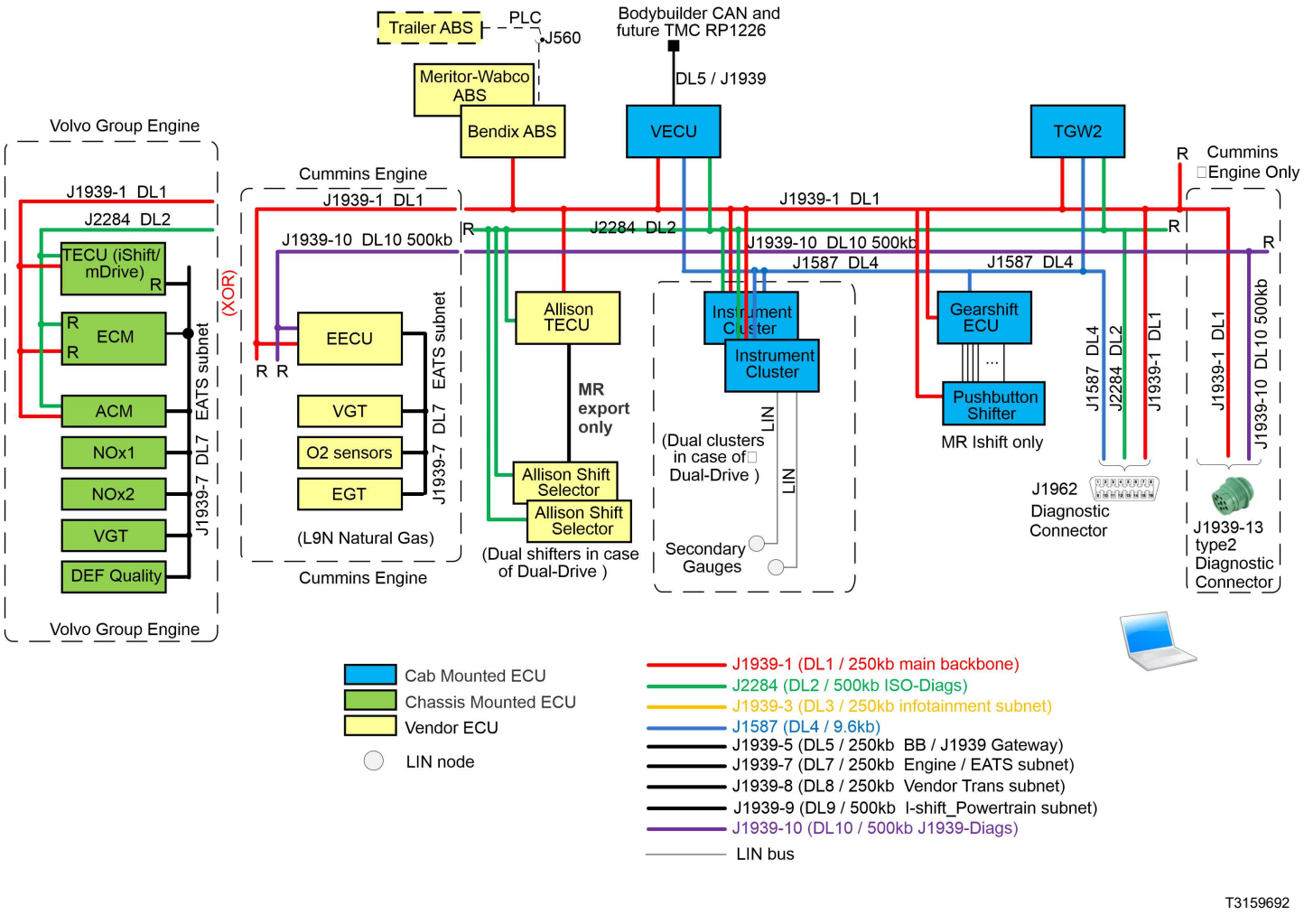

All Rights Reserved

Acronym	Description
ABS	Anti-lock braking system
ACM	Aftertreatment Control Module
DEF	Diesel Exhaust Fluid
ECM	Engine Control Module
EECU	Engine Electronic Control Unit
EGT	Exhaust Gas Temperature
GSECU	Gear Selector ECU
LIN	Local Interconnect Module
NOx	Nitrogen Oxide
TECU	Transmission Electronic Control Unit
TGW2	Telematics Gateway2
VGT	Variable Geometry Turbocharger

Termination Resistor

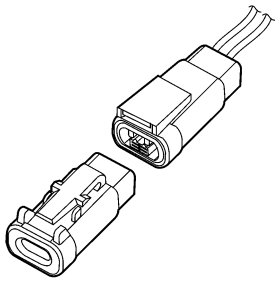

W3005518

Termination Resistor, 2–pin

Termination Resistor – J1939

Termination resistors are wired to each end of the SAE J1939 data link to prevent signal reflections. They must remain connected for the data link to function properly. The resistance value of each termination resistor is 110 – 130 Ω. When properly installed in the data link, their combined resistance is 50 – 70 Ω since they are connected in parallel.

The termination resistor at one end of the SAE J1939 data link is located in the fuse and relay centre (FRC) near the vehicle electronic control unit (VECU) and the other near the engine control module (ECM). On vehicles equipped with MACK engines, the termination resistor at the engine end is located inside the ECM. On vehicles equipped with Cummins engine, the termination resistor is located in the harness area just outside of the ECM.

A SAE J1939 data link connection is located at the transmission area in the chassis harness. On vehicles equipped with an electronically controlled transmission (Allison/Autoshift II/Meritor Freedom Line), the connection to the transmission is located at the chassis harness. On vehicles equipped with a manual non-electronically controlled transmission - the connector stub will have an unterminated blanking plug installed.

Only two termination resistors are used in each data link. Never install more than two terminator resistors in one data link. If more than two resistors exist in the SAE J1939 data link circuit, incorrect or absent signals may occur. You can easily check to see if you have two resistors by measuring the resistance between pin C and D for the 9-pin diagnostic connector, or pin 3 and 11 for the 16-pin diagnostic connector, with the ignition key in OFF position. The correct resistance is 50 – 70 Ω. The termination resistors should each have a resistance of 110–130 Ω when tested individually.

All Rights Reserved

Termination Resistor – ISO 14229

Termination resistors are also wired for the ISO 14229 data link. One resistor is located in the engine control module (ECM). The other is a two-pin resistor located in the dashboard close to the diagnostic connector. The diagnostic connector is located on the driver's side lower instrument panel. Termination resistors must remain connected for the data link to function properly. The resistance value of each termination resistor is 110 – 130 Ω. When properly installed in the data link, their combined resistance is 50 – 70 Ω since they are connected in parallel

The termination resistor at one end of the ISO 14229 data link is located in the fuse and relay centre (FRC) near the vehicle electronic control unit (VECU) and the other near the engine control module (ECM). On vehicles equipped with MACK engines, the termination resistor at the engine end is located inside the ECM.

A ISO 14229 data link connection is located at the transmission area in the chassis harness. On vehicles equipped with an electronically controlled transmission (Allison/Autoshift II/Meritor Freedom Line), the connection to the transmission is located at the chassis harness. On vehicles equipped with a manual non-electronically controlled transmission - the connector stub will have an unterminated blanking plug installed.

Only two termination resistors are used in each data link. Never install more than two terminator resistors in one data link. If more than two resistors exist in the ISO 14229 data link circuit, incorrect or absent signals may occur. You can easily check to see if you have two resistors by measuring the resistance between pin 3 and 11 for the 16-pin diagnostic connector, with the ignition key in OFF position. The correct resistance is 50 – 70 Ω. The termination resistors should each have a resistance of 110 – 130 Ω when tested individually.

Notes

All Rights Reserved

Another more convenient way to connect to J1939 (or J1587) is through the diagnostic connector.

9-pin Diagnostic Connector

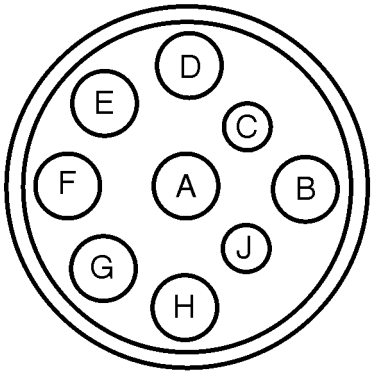

W9000628

Fig. 35 9-pin Diagnostic Connector

Note: Export Engines Only

9-pin Diagnostic Connector

9-pin Diagnostic Connector	
Pin	**Definition**
A	Ground
B	Battery
C	CAN H (J1939 H-Yellow)
D	CAN L (J1939 L-Green)
E	Not used (Shield)
F	J1587 +
G	J1587 –
H	Not Used
J	Ignition + (Key Switch)

All Rights Reserved

16-pin Diagnostic Connector

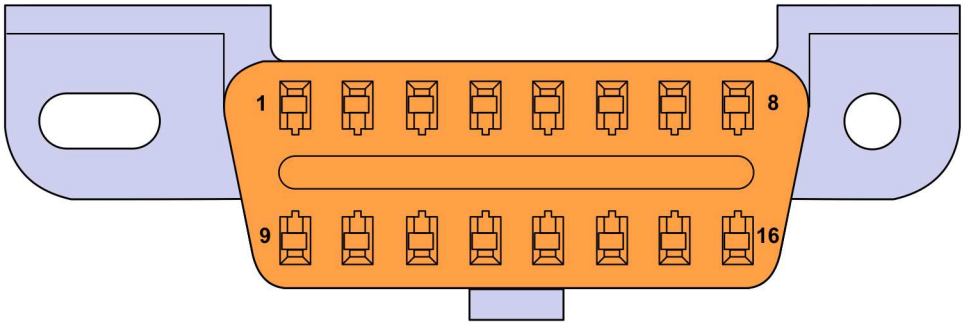

Fig. 36 16-pin Diagnostic Connector (OBD 13)

16-pin Diagnostic Connector (OBD 13) Pin Allocation

16-pin Diagnostic Connector (OBD 13 SAE J1962-Type A Connector)	
Pin	**Definition**
1	OEM discretionary (assigned as: Key switch – ignition signal for AM tool)
2	(Not Used)
3	OEM discretionary (assigned as: SAE J1939-15_CAN_H)
4	Chassis ground
5	Chassis ground
6	CAN_H line of ISO
7	(Not Used)
8	(Not Used)
9	(Not Used)
10	(Not Used)
11	OEM discretionary (assigned as: SAE J1939-15_CAN_L)
12	OEM discretionary (assigned as: SAE J1587 positive)
13	OEM discretionary (assigned as: SAE J1587 negative)
14	CAN_L line of ISO
15	(Not Used)
16	Battery positive voltage

All Rights Reserved

Supported DL1 SAE J1939 Serial Messages

Note: Mack does not recommend broadcasting on the databus. However, it is known that there are devices on the market which affect an engine speed control.

Mack broadcasts the following with message and signal definition per SAE J1939-71. Exceptions noted. Dates are build dates rather than model year. Most changes correspond with emissions regulation.

SAE J1939 Messages

SAE J1939 Messages						
PGN	**Message Name**	**Source Address**	**SPN**	**Signal Name**	**Usage**	**Notes**
65198	Air Supply Pressure	23	1087	Service Brake Circuit 1 Air Pressure	Conventional Since 2007	
			1088	Service Brake Circuit 2 Air Pressure		
			46	Pneumatic Supply Pressure		
65269	Ambient Conditions	0, 17, 23	171	Ambient Air Temperature	SA 23 Since 2007 & SA 0.17 since 2010	23 – Sensor Source
		0	108	Barometric Pressure	Since 2007	
			172	Engine Air Intake Temperature		
64891	Aftertreatment 1 Service	0	3719	Aftertreatment Diesel Particulate Filter 1 Soot Load Percent	Since 2007	
			3720	Aftertreatment Diesel Particulate Filter 1 Ash-Load Percent		
65110	Aftertreatment 1 SCR Reagent Tank 1 Information	0	1761	Aftertreatment 1 SCR Catalyst Tank Level	Since 2010	
			3517	Aftertreatment 1 SCR Catalyst tank Level 2		
			5245	Aftertreatment 1 DEF Tank Low-Level Indicator		
			5246	Aftertreatment SCR Operator Inducement Severity		
64946	Aftertreatment 1 Intermediate Gas	0	3251	Aftertreatment 1 Diesel Particulate Filter Differential Pressure	Since 2007	
64947	Aftertreatment 1 Outlet Gas 2	0	3246	Aftertreatment 1 Diesel Particulate Filter Outlet Gas Temperature	Since 2007	

All Rights Reserved

SAE J1939 Messages						
PGN	**Message Name**	**Source Address**	**SPN**	**Signal Name**	**Usage**	**Notes**
64948	Aftertreatment 1 intake Gas 2	0	3242	Aftertreatment 1 Diesel Particulate Filter Intake Gas Temperature	Since 2007	
65265	Cruise Control/Vehicle Speed	17	84	Wheel-Based Vehicle Speed	All	
			86	Cruise Control Set Speed		
			595	Cruise Control Active		
			596	Cruise Control Enable Switch		
			597	Brake Switch		
			598	Clutch Switch		
			599	Cruise Control Set Switch		
			600	Cruise Control Coast (Decelerate) Switch		
			601	Cruise Control Resume Switch		
			602	Cruise Control Acceler-ate Switch		
			976	PTO Governor State		Reflects engine speed control state not PTO input or output state.
			527	Cruise Control States		
			70	Parking Brake Switch		
57344	Cab Message 1	23	3695	Diesel Particulate Filter Regeneration Inhibit Switch	Since 2007	
			3696	Diesel Particulate Filter Regeneration Force Switch		
			1856	Seat Belt Switch	Since 2010	
65276	Dashboard Display	23	96	Fuel Level 1	Since 2007	
65226	DM1	0			Since 2007	
64952	DM26	0			Since 2010	

All Rights Reserved

SAE J1939 Messages						
PGN	**Message Name**	**Source Address**	**SPN**	**Signal Name**	**Usage**	**Notes**
64892	Diesel Particulate Filter Control 1	0	3697	Diesel Particulate Filter Lamp Command	Since 2007	
			3698	Exhaust System High Temperature Lamp Command		
			3699	Diesel Particulate Filter Passive Regeneration Status		
			3700	Diesel Particulate Filter Active Regeneration Status		
			3701	Diesel Particulate Filter Status		
			3702	Diesel Particulate Filter Active Regeneration Inhibited Status		
			3703	Diesel Particulate Filter Active Regeneration Inhibited Due to Inhibit Switch		
			3706	Diesel Particulate Filter Active Regeneration Inhibited Due to PTO Active		
			3707	Diesel Particulate Filter Active Regeneration Inhibited Due to Accelerator Pedal Off Idle		
			3709	Diesel Particulate Filter Active Regeneration Inhibited Due to Vehicle Speed Above Allowed Speed		
			3710	Diesel Particulate Filter Active Regeneration Inhibited Due to Parking Brake Not Set		
			3711	Diesel Particulate Filter Active Regeneration Inhibited Due to Low Exhaust Gas Temperature		
			3712	Diesel Particulate Filter Active Regeneration Inhibited Due to System Fault Active		
64892 (cont.)	Diesel Particulate Filter Control 1	0	3714	Diesel Particulate Filter Active Regeneration	Since 2007	

All Rights Reserved

SAE J1939 Messages						
PGN	**Message Name**	**Source Address**	**SPN**	**Signal Name**	**Usage**	**Notes**
				Inhibited Due to Temporary System Lockout		
			3715	Diesel Particulate Filter Active Regeneration Inhibited Due to Permanent System Lockout		
			3716	Diesel Particulate Filter Active Regeneration Inhibited Due to Engine Not Warmed Up		
			3698	Exhaust System High Temperature Lamp Command		
61441	Electronic Brake Controller 1	11	561	ASR Engine Control Active	Per ABS type	
			562	ASR Brake Control Active	Per ABS type	
			563	Anti-Lock Braking (ABS) Active		
			1121	EBS Brake Switch	Not Used	
			521	Brake Pedal Position	Not Used	
			575	ABS Off-road Switch	Per ABS type	
			576	ASR Off-road Switch	Per ABS type	
			577	ASR "Hill Holder" Switch	With I-shift/ *m*Drive	
			1238	Traction Control Override Switch	Per ABS type	
			1243	ABS Fully Operational		
			1438	ABS/EBS Amber Warning Signal (Powered Vehicle)		
			1793	ATC/ASR Information Signal	Per ABS type	
			1481	Source Address of Controlling Device for Brake Control	Per ABS type	
			1836	Trailer ABS Status	Per ABS type	
			1792	Tractor-Mounted Trailer ABS Warning Signal	Per ABS type	

All Rights Reserved

SAE J1939 Messages						
PGN	**Message Name**	**Source Address**	**SPN**	**Signal Name**	**Usage**	**Notes**
65215	Wheel Speed Information	11	904	Front Axle Speed	All	
			905	Relative Speed; Front Axle, Left Wheel		
			906	Relative Speed; Front Axle, Right Wheel		
			907	Relative Speed; Rear Axle #1, Left Wheel		
			908	Relative Speed; Rear Axle #1, Right Wheel		
			909	Relative Speed; Rear Axle #2, Left Wheel		
			910	Relative Speed; Rear Axle #2, Right Wheel		
64964	Electronic Brake Controller 5	11	2912	Hill holder mode	With Ishift/*m*Drive	
61444	Electronic Engine Controller 1	0	899	Engine Torque Mode	All	20 ms fixed rate
			512	Driver's Demand Engine - Percent Torque		
			513	Actual Engine - Percent Torque		
			190	Engine Speed		
			1483	Source Address of Controlling Device for Engine Control		
			1675	Engine Starter Mode		
61443	Electronic Engine Controller 2	0	558		All	
			91	Accelerator Pedal Position 1		from SA 17 with Cummins
			92	Engine Percent Load At Current Speed		
65247	Electronic Engine Controller 3	0	514	Nominal Friction - Percent Torque	All	
64981	Electronic Engine Controller 5		2791	Engine Exhaust Gas Recirculation 1 (EGR1) Valve Control	Since 2007	
			2795	Engine Variable Geometry Turbocharger (VGT) 1 Actuator Position	All	
65263	Engine Fluid Level/Pressure 1	0	94	Engine Fuel Delivery Pressure	All	
			98	Engine Oil Level		

All Rights Reserved

SAE J1939 Messages						
PGN	**Message Name**	**Source Address**	**SPN**	**Signal Name**	**Usage**	**Notes**
			100	Engine Oil Pressure		
			101	Engine Crankcase Pressure		
			111	Engine Coolant Level		
65251	Engine Configuration 1	0			30 bytes	
61440	Electronic Retarder Controller 1	0, 15	900	Retarder Torque Mode	SA 15 before 2007	
			520	Actual Retarder - Percent Torque		
65262	Engine Temperature 1		110	Engine Coolant Temperature	All	
			174	Engine Fuel Temperature 1		
			175	Engine Oil Temperature 1		
61442	Electronic Transmission Controller 1	3	161	Transmission Input Shaft Speed	Automated transmissions	
			560	Transmission Driveline Engaged		
			573	Transmission Torque Converter Lockup Engaged		
			574	Transmission Shift In Process		
			4816	Transmission Torque Converter Lockup Transition in Process		
			191	Transmission Output Shaft Speed		SA 17 with Cummins
			522	Percent Clutch Slip		
			606	Engine Momentary Overspeed Enable		
			607	Progressive Shift Disable		
			5015	Momentary Engine Maximum Power Enable		
61445	Electronic Transmission Controller 2	3	524	Transmission Selected Gear	Automated transmissions	
			523	Transmission Current Gear		
			526	Transmission Actual Gear Ratio		

All Rights Reserved

SAE J1939 Messages						
PGN	**Message Name**	**Source Address**	**SPN**	**Signal Name**	**Usage**	**Notes**
65134	High-Resolution Wheel Speed	11	1592	Front Axle, Left Wheel Speed	Since 2007	
			1593	Front axle, right wheel speed		
			1594	Rear axle, left wheel speed		
			1595	Rear axle, right wheel speed		
65270	Intake/Exhaust Conditions 1	0	173	Engine Exhaust Gas Temperature	Since 2007 SA 23 from 2004-2007	
			102	Engine Intake Manifold #1 Pressure	Since 2007	
			105	Engine Intake Manifold 1 Temperature		
			106	Engine Air Intake Pressure		
			107	Engine Air Filter 1 Differential Pressure		
65266	Fuel Economy (Liquid)	0	183	Engine Fuel Rate	Since 2007	
			184	Engine Instantaneous Fuel Economy		
			185	Engine Average Fuel Economy		
65254	Time/Date	23	959	Seconds	All	
			960	Minutes		UTC/GMT
			961	Hours		UTC/GMT
			962	Day		
			963	Month		
			964	Year		
			1601	Local minute offset		Display clock
			1602	Local hour offset		Display clock
65272	Transmission Fluids 1	3	177	Transmission Oil Temperature	Automated Transmissions	
0	Torque/Speed Control 1	3,11,17, 42, 230	695	Engine Override Control Mode	By options – engine brake,	
			898	Engine Requested Speed/Speed Limit		

All Rights Reserved

SAE J1939 Messages						
PGN	**Message Name**	**Source Address**	**SPN**	**Signal Name**	**Usage**	**Notes**
			518	Engine Requested Torque/Torque Limit	transmission, etc.	
61449	Vehicle Dynamic Stability Control 2	11	1807	Steering Wheel Angle	Trucks with stability control	
			1808	Yaw Rate		
			1809	Lateral Acceleration		
			1810	Longitudinal Acceleration		
			1811	Steering Wheel Turn Counter		
			1812	Steering Wheel Angle Sensor Type		
65103	Vehicle Dynamic Stability Control 1	11	1813	VDC Information Signal	Trucks with stability control	
			1814	VDC Fully Operational		
			1815	VDC brake light request		
			1816	ROP Engine Control active		
			1817	YC Engine Control active		
			1818	ROP Brake Control active		
			1819	YC Brake Control active		
65217	High-Resolution Vehicle Distance	23	917	High-Resolution Total Vehicle Distance	All	
			918	High-Resolution Trip Distance		
65271	Vehicle Electrical Power 1	0	158	Key switch Battery Potential	Since 2007	
65260	Vehicle Identification	0	237	Vehicle Identification Number	Since 2010	
65135	Adaptive Cruise Control	42	1586	Speed of forward vehicle	By option	
			1587	Distance to forward vehicle		
			1588	Adaptive Cruise Control Set Speed		
			1589	Adaptive cruise control set distance mode		
			1590	Adaptive Cruise Control Mode		
			1796	ACC Distance Alert Signal		
			1797	ACC System Shutoff Warning		

All Rights Reserved

SAE J1939 Messages						
PGN	**Message Name**	**Source Address**	**SPN**	**Signal Name**	**Usage**	**Notes**
			1798	ACC Target Detected		
			5022	Forward Collision Warning		
65264	Power take-off Information	17	980	Engine PTO Governor Enable Switch	Mack	
			984	Engine PTO Governor Set Switch		
256	Transmission Control 1	11	681	Transmission Gear Shift Inhibit Request	By ABS type with Automatic Transmis-sion	
1024	External Brake Request	3	2920	External Acceleration Demand	*mDRIVE*	
			2914	XBR EBI Mode		
			2915	XBR Priority		
			2916	XBR Control Mode		
			3189	XBR Message Counter		
			3188	XBR Message Checksum		

Notes

All Rights Reserved

Multiplexing Body Builder DL5 J1939 CAN

The multiplexing system BB J-1939 CAN is used to provide control and communication between all major functional areas on a vehicle (engine, electrical, transmission, etc). The system offers simplified communication between the body builder module and other related electrical systems. Multiple signals are sent over a single pair of twisted wires, as opposed to individual wires for each function. The J1939 data link is used to send these signals.

The benefit of this arrangement is fewer wires, sensors and connections are required for communication purposes between systems. Also, there is greater signal consistency and reliability.

Multiplexing Parameters

SAE	CAN Network	Source of Message	Receiver of Message	Update Rate	PGN Signal Names (SPN)
ACC1 (65135)	J1939-X	VECU (as ACB)	Ext CAN	100 ms	Forward vehicle speed Forward vehicle distance ACC Set Speed ACC Mode ACC set distance mode Road curvature ACC Target Detected ACC System Shutoff Warning ACC Distance Alert Signal
ACC Status (65296)	J1939-X	VECU (as ACB)	Ext CAN	100 ms	(Proprietary message from ACB) Audible Following Distance Alert Visual Following Distance Alert Vehicle Following Distance Vehicle Following Interval ACB tell-tale Indicator Status
ACB Critical Events (PGN 65297)	J1939-X	VECU (as ACB)	Ext CAN	100 ms	CMT Intervention Impact Alert
AIR1	J1939-X	VECU	Ext CAN	1 second	Pneumatic Supply Pressure 46
AMB (65269)	J1939-X	VECU (as EMS)	Ext CAN	1 second	Ambient Air Temperature, Barometric pressure
AT1S (PGN 64891)	J1939-X	VECU (per reply)	Ext CAN	On Request	Diesel Particulate Filter 1 Soot Load Percent 3719 Diesel Particulate Filter 1 Ash Load Percent 3720
AT1T1I	J1939-X	VECU (as ACM)	Ext CAN	1 second	Aftertreatment 1 SCR Catalyst Tank Level 1761 Aftertreatment 1 SCR Catalyst Tank Temperature 3031 Aftertreatment 1 SCR Catalyst Tank Level 2 3517 Aftertreatment 1 DEF Tank Low-Level Indicator 5245 Aftertreatment SCR Operator Inducement Severity 5246
B	J1939-X	VECU (as IC)	Ext CAN	1 second	Brake Application Pressure (SPN 116) Brake Primary Pressure (SPN 117) Brake

All Rights Reserved

SAE	CAN Network	Source of Message	Receiver of Message	Update Rate	PGN Signal Names (SPN)
					Secondary Pressure (SPN 118) Parking Brake Red Warning Signal (SPN 3557)
CCVS (65265)	J1939-X	VECU	Ext CAN	100 ms	Vehicle speed, etc.
CI (PGN 65259)	J1939-X	VECU (as EMS)	Ext CAN	On Request	Component ID, etc.
CVW (PGN 65136)	J1939-X	VECU (per reply)	Ext CAN	On Request	Weights
DD (65276)	J1939-X	VECU (as IC)	Ext CAN	1 second	Washer Fluid Level (SPN 80) Fuel Level 1 (SPN 96)
DM1	J1939-X	VECU (as received)	Ext CAN	1 second	Fault lamps, etc.
DPFC1 (PGN 64892)	J1939-X	VECU (as EMS)	Ext CAN	1 second	DPF status, etc.
EBC1 (PGN 61441)	J1939-X	VECU (as ABS)	Ext CAN	100 ms	Anti-Lock Braking (ABS) Active, etc.
EBC1 (PGN 61441)	J1939-X	Ext CAN	VECU	100 ms	Remote Accelerator Pedal Enable Switch, Accelerator Interlock Switch
EBC1 (PGN 61441)	J1939-X	VECU	Cummins	100 ms	Remote Accelerator Pedal Enable Switch (SPN 969), Accelerator Interlock Switch (SPN 972) Engine retarder selection (SPN 973)
EBC2 (WSI PGN 65215	J1939-X	VECU (as ABS)	Ext CAN	100 ms	Wheel speeds
EBC5 (PGN 64964)	J1939-X	VECU (as ABS)	Ext CAN	100 ms	Hill Holder Mode
EEC1 (61444)	J1939-X	VECU (as EMS)	Ext CAN	As received	Engine Speed, etc
EEC2 (61443)	J1939-X	VECU	Ext CAN	50 ms	Accelerator Pedal Position
EEC2 (61443)	J1939-X	Ext CAN	VECU	50 ms	Remote Accelerator Pedal Position
EEC2 (61443)	J1939	VECU	Cummins	50 ms	Accelerator Pedal Position 1 Remote Accelerator Pedal Position
EFL/P1 (PGN 65263)	J1939-X	VECU (as EMS)	Ext CAN	500 ms	Engine Oil Level 98 Engine Oil Pressure 100 Engine Crankcase Pressure 101 Engine Coolant Level 111

All Rights Reserved

SAE	CAN Network	Source of Message	Receiver of Message	Update Rate	PGN Signal Names (SPN)
ET1 (PGN 65262)	J1939-X	VECU (as EMS)	Ext CAN	1 second	Engine Coolant Temperature 110 Engine Fuel Temperature 1 174 Engine Oil Temperature 1 175
ETC1	J1939-X	VECU (as TECU)	Ext CAN	10 ms	Driveline engaged status
ETC2	J1939-X	VECU (as TECU)	Ext CAN	100 ms	Current gear status, requested gear status
ETC7	J1939-X	VECU (as TECU)	Ext CAN	100 ms	Shift and mode indicators, etc.
GFC (PGN 65199)	J1939-1	VECU (as EMS)	Ext CAN	On request	Trip Fuel (Gaseous) 1039 Total Fuel Used (Gaseous) 1040
HOURS (PGN 65253)	J1939-X	VECU (as EMS)	Ext CAN	On request	Engine Total Hours of Operation 247 Engine Total Revolutions 249
HRLFC (PGN 64777)	J1939-X	VECU (as EMS)	Ext CAN	1 second	High-Resolution Engine Trip Fuel 5053 High-Resolution Engine Total Fuel Used 5054
HRW (PGN 65134)	J1939-X	VECU (as ABS)	Ext CAN	20 ms	Wheel speeds
IO (PGN 65244)	J1939-X	VECU (as EMS)	Ext CAN	On request	Engine Total Idle Fuel Used 236 Engine Total Idle Hours 235
IC1 (PGN 65270)	J1939-X	VECU (as EMS)	Ext CAN	500 ms	Engine Exhaust Gas Temperature, etc.
LC (PGN 65089)	J1939-X	VECU (as LCM)	Ext CAN	1 second and change of state	Light switches, etc.
LC (PGN 65089)	J1939-X	VECU (as LCM)	Ext CAN	1 second and change of state	Light switches, etc.
LFC (PGN 65257)	J1939-X	VECU (as EMS)	Ext CAN	On request	Engine Trip Fuel 182 Engine Total Fuel Used 250
LFE (PGN 26266)	J1939-X	VECU (as EMS)	Ext CAN	100 ms	Engine Fuel Rate 183 Engine Instantaneous Fuel Economy 184 Engine Average Fuel Economy 185
OEL (PGN 64972)	J1939-X	VECU (as IC)	Ext CAN	1 second and change of state	Main Light Switch 2872 Turn Signal Switch 2876 Hazard Light Switch 2875 High-Low Beam Switch 2874 Operators Desired Back-light 2878
PTO (PGN 65264)	J1939-X	VECU	Ext CAN	100 ms	Power take-off Set Speed 187 Engine PTO Governor Enable Switch 980 Engine Remote PTO Governor Preprog-rammed Speed Control Switch 979 Engine Remote PTO Governor Variable Speed Control Switch 978

All Rights Reserved

SAE	CAN Network	Source of Message	Receiver of Message	Update Rate	PGN Signal Names (SPN)
					Engine PTO Governor Set Switch 984 Engine PTO Governor Coast/Decelerate Switch 983 Engine PTO Governor Resume Switch 982
PTODE (PGN 64932)	J1939-X	VECU (as TECU)	Ext CAN	100 ms	Engagement Consent – Transmission input shaft PTO 2 (SPN 3457) Engagement Consent – Transmission input shaft PTO 1 (SPN 3456) Engagement consent – Transmission output shaft PTO (SPN 3458)
PTODE (PGN 64932)	J1939-1	VECU	TECU, Allison	100 ms	Enable switch – Transmission input shaft PTO 2 (SPN 3453) Enable switch – Transmission input shaft PTO 1 (SPN 3452)
PTODE (PGN 64932)	J1939-1	EXT CAN	VECU	100 ms	Enable switch – Transmission input shaft PTO 2 (SPN 3453) Enable switch – Transmission input shaft PTO 1 (SPN 3452) Enable switch - PTO engine accessory drive 1
Request	J1939-X	Ext CAN	VECU		PGN
Request	J1939–1	VECU	As received	As received in most cases	PGN
SERV (PGN 65216)	J1939-X	VECU	Ext CAN	On request	Service component identification Service distance (associated to upper Service component ID) Service component identification Service delay/calendar time based (associated to upper Service component ID) Service component identification Service delay/operational time based (associated to upper Service component ID)
SOFT (PGN 65242)	J1939-1	VECU	Ext CAN	On request	Variable length
TCFG (PGN 65250)	J1939-1	VECU	Ext CAN	On request	Number of Reverse Gear Ratios 958 Number of Forward Gear Ratios 957 Transmission Gear Ratio 581
TC1 (PGN 256)	J1939-1	VECU	TECU (Allison)	50 ms (when active)	See Allison data link Communication Guide
TC1 (PGN 256)	J1939-X	VECU (as Shifter 05 and 06)	Ext CAN	50 ms (when active)	See Allison data link Communication Guide
TC1 (PGN 256)	J1939-1	Allison Shifter	VECU	50 ms (when active)	See Allison data link Communication Guide
TC1 (PGN 256)	J1939-X	EXT CAN (DA TECU)	VECU	50 ms (when active)	See Allison data link Communication Guide
TD (PGN 65254)	J1939-X	VECU (as IC)	Ext CAN	On Request	Time & date

All Rights Reserved

SAE	CAN Network	Source of Message	Receiver of Message	Update Rate	PGN Signal Names (SPN)
TSC1 (PGN 0)	J1939-1	VECU	EMS	10 ms	Engine override control mode Override control mode priority Engine requested torque/torque limit Engine Requested Speed/Speed Limit 898
TSC1 (PGN 0)	J1939-1	Ext CAN (DA EMS)	VECU	10 ms	Engine override control mode Override control mode priority Engine requested torque/torque limit Engine Requested Speed/Speed Limit 898
TRF1 (PGN 65272)	J1939-X	VECU (as TECU)	Ext CAN	1 second	Transmission Oil Temperature 177, etc.
TRF2 (PGN 64917)	J1939-X	VECU (as TECU)	Ext CAN	1 second	Transmission Overheat Indicator SPN 5345
RF (PGN 65275)	J1939-X	VECU (as TECU)	Ext CAN	second	Hydraulic Retarder Oil Temperature, Driveline Retarder Overheat Indicator
VD (PGN 65248)	J1939-X	VECU (as IC)	Ext CAN	1 second	Total Vehicle Distance 245 Convert from VDHR
VDC1 (PGN 65103)	J1939-X	VECU (as ABS)	Ext CAN	100 ms	VDC Information Signal, etc.
VDHR (PGN 65217)	J1939-X	VECU (as IC)	Ext CAN	1 second	High-Resolution Total Vehicle Distance 917
VH (PGN 65255)	J1939-X	VECU	Ext CAN	On request	Total Vehicle Hours 246 Total power take-off Hours 248
VI (PGN 65260)	J1939-X	VECU (as EMS)	Ext CAN	On request	VIN
VW (PGN 65258)	J1939-X	VECU (as ECS)	Ext CAN	1 second	Weights (note this is multiframe so is difficult to respond to so will gateway at received rate)
VDC1 (PGN 65103)	J1939-X	VECU (as ACB)	Ext CAN	100 ms	VDC Information Signal, etc.
VP190 (PGN 65470)	J1939-X	VECU (as EMS)	Ext CAN	15 second	SCR used
VP60	J1939-1	VECU	TECU (I shift)	100 ms	Reverse Inhibit, Inhibit gear engaged (from TC1), PTO Conditions #1, PTO Conditions #2
VEP1 (PGN 65271)	J1939-X	VECU (as IC)	Ext CAN	1 second	SPN 168 Battery Potential/Power Input 1

All Rights Reserved

Note: Although the VECU sends output messages, the source address is set as the ECU originating the information.

Note: Messages that rates “on request” are requested by the J1939 request PGN 59904 described in J1939-21. For example, requesting engine hours is done by sending EAFF or EA00 with data E5 FE 00 (hex values).

Note: Not all messages are supported on all vehicles. For example, GFC is currently not available, even for natural gas engines. However, GFC support could be available for these engines in the future.

Commands Accepted on the DL5 Body Link III Connector J1939

Message	Update Rate	Content
EBC1 (PGN 61441)	100 ms	Remote Accelerator Pedal Enable Switch Accelerator Interlock Switch
EEC2 (61443)	50 ms	Accelerator Pedal Position 2 Remote Accelerator Pedal Position
PTODE (PGN 64932)	100 ms	Enable Switch – Transmission input shaft PTO 2 (SPN 3453) Enable Switch – Transmission input shaft PTO 1 (SPN 3452) Enable Switch - PTO Engine Accessory Drive 1
TSC1 (PGN 0) (DA EMS)	10 ms	Engine Override Control Mode 695 Engine Requested Torque/Torque Limit 518 Engine Requested Speed/Speed Limit 898
TC1 (PGN 256) (DA TECU)	50 ms (when active)	See Allison data link Communication Guide

Application Notes

By default, these commands are not accepted. To enable commands:

- QIW = 1 Bridge on J-1939 for Body Builder Enable (1) Level 4 Dealer Programmable
- QKH = 1 External CAN Control Enable (1) Level 4 Dealer Programmable
- QKX = 229 (Body Builder must use this Source address 229)
- A Terminating resistor for the network needs to be installed.

For safety, the accelerator and speed command signals will be overridden by a brake pedal application by default. If necessary, this options can be turned off with parameter QKD. Perform a safety analysis of the application before disabling.

Although the VECU accepts these messages, the destination address (DA) needs to be 0x00 for TSC1 and 0x03 for TC1.

The engine speed command can be sent either through the accelerator command or by direct engine speed command.

All Rights Reserved

Accelerator Pedal Commands

Remote Accelerator is commanded by sending E**BC1. Remote Accelerator Enable Switch** while also sending a position in **EEC2. Remote Accelerator Pedal Position**.

Primary Pedal position can be disabled by sending **EBC1. Remote Accelerator Enable Switch** without **EEC2. Remote Accelerator Pedal Position** or setting **EEC2. Remote Accelerator Pedal Position** to 0. But for clearer intent it is recommended to send **EBC1. Accelerator Interlock Switch**.

Engine Speed Commands

An engine speed command is sent by setting **TSC1. Engine Override Control Mode** to **01-Speed Control** and sending the desired speed in **SPN 898**.

SPN 898 can also represent a speed limit if **TSC1. Engine Override Control Mode** is set to **03**. Note that there are engine performance effects while operated at a limit, therefore it is recommended to disable the accelerator pedal, if that serves the intent, rather than set a limit at a command value.

Engine Torque can be limited using **TSC1. Engine Override Control Mode 02** with corresponding value in **SPN 518**.

If commands and limits are desired at the same time, **TSC1** can be repeated with different information to enable speed requests and limits at the same time since the commands will persist. Although the commands will time out if not repeated, it is recommended to end command sessions with **TSC1. Engine Override Control Mode 00** which will end all limits and commands.

PTO

mDRIVE and Allison Transmissions can accept PTODE to request PTO engagement through the “enable switch” signals. PTODE is also a response from the transmission to these requests though the “engagement consent” signals.

Source Addresses and Unit Acronyms

Control Unit	ECU	Source address (SA) or Destination Address (DA) in Hex
Engine Management System	EMS	0x00
Transmission Electronic Control Unit/ Control Module	TECU/TCM	0x03
Anti-lock Brake System	ABS	0x0B
Gear Shift Electronic Control Unit	GSECU	0x05 (0x06 for right side on LR)
Engine Brake	EB	0x0F
Vehicle Electronic Control Unit	VECU	0x11
Instrument Cluster	IC	0x17
Adaptive Cruise with Braking function	ACB	0x2A
Electronically Controlled Suspension	ECS	0x2F
Aftertreatment Control Module	ACM	0x3D

All Rights Reserved

Support Inbound and Outbound DL1 J-1939 Message Information

Note: MACK does not recommend broadcasting on the data bus. However, it is known that there are devices on the market which affect an engine speed control. MACK broadcasts the following with message and signal definition per SAE J1939-71.

Instrument Cluster

Message	Bus	From ECU	To ECU	Update Rate	Content
B (65274)	J1939–1	IC	VECU	1 s	Brake Application Pressure (SPN 116) Brake Primary Pressure (SPN 117) Brake Secondary Pressure (SPN 118) Parking Brake Red Warning Signal (SPN 3557)
CL (53248)	J1939-1	IC	VECU	5 s and state change	Illumination Brightness Percent (SPN 1487)
CM1 (57344)	J1939-1	IC	VECU	1 s	Seat Belt Switch (SPN 1856) Diesel Particulate Filter Regeneration Inhibit Switch (SPN 3695) Diesel Particulate Filter Regeneration Force Switch (SNP 3696)
DD (65276)	J1939-1	IC	VECU	1 s	Washer Fluid Level (SPN 80) Fuel Level 1 (SPN 96)
LC (PGN 65089)	J1939-1	IC	VECU	1 s and change of state	Low Beam Headlight Command 2349 High Beam Headlight Command 2347 Right Turn Signal Lights Command 2369 Left Turn Signal Lights 2367 Rotating Beacon Light Command (Hazard) 2385
OEL (PGN 64972)	J1939-1	IC	VECU	1 s and change of state	Main Light Switch 2872 Turn Signal Switch 2876 Hazard Light Switch 2875 High-Low Beam Switch 2874 Operators Desired Back-light 2878
TD (PGN 65254)	J1939-1	IC	VECU	1 s	Time & date
VEP1 (PGN 65271)	J1939-1	IC	VECU	1 s	SPN 168 Battery Potential/Power Input 1
VDHR (PGN 65217)	J1939-1	IC	VECU	1 s	High-Resolution Total Vehicle Distance 917

All Rights Reserved

ACC/ABS

Message	Bus	From ECU	To ECU	Update Rate	Content
ACC1 (PGN 65135)	J1939-1	ACB (0x2A)	VECU	100 ms	Forward Vehicle Speed Forward Vehicle Distance ACC Set Speed ACC Mode ACC Set Distance Mode Road Curvature ACC Target Detected ACC System Shutoff Warning ACC Distance Alert Signal
ACC Status (PGN 65296)	J1939-1	ACB	VECU	100 ms	(Proprietary message from ACB) Audible Following Distance Alert Visual Following Distance Alert Vehicle Following Distance Vehicle Following Interval ACB tell-tale Indicator Status
ACB Critical Events (PGN 65297)	J1939-1	ACB	VECU	100 ms	CMT Intervention Impact Alert
EBC5 (PGN 64964)	J1939-1	ABS	VECU	100 ms	Hill Holder Mode
EBC1 (PGN 61441)	J1939-1	ABS	VECU	100 ms	Anti-Lock Braking (ABS) Active, etc.
EBC2 (WSI PGN 65215	J1939-1	ABS	VECU	100 ms	Wheel speeds
HRW (PGN 65134)	J1939-1	ABS	VECU	20 ms	Wheel speeds
VDC1 (PGN 65103)	J1939-1	ABS	VECU	100 ms	VDC Information Signal, etc.

EMS/ACM

Message	Bus	From ECU	To ECU	Update Rate	Content
AT1T1I	J1939-1	EMS	VECU	1 s	Aftertreatment 1 DEF Tank Low-Level Indicator 5245 Aftertreatment SCR Operator Inducement Severity 5246
AT1T1I	J1939-1	ACM	VECU	1 s	Aftertreatment 1 SCR Catalyst Tank Level 1761 Aftertreatment 1 SCR Catalyst Tank Temperature 3031 Aftertreatment 1 SCR Catalyst Tank Level 2 3517
AT1S (PGN 64891)	J1939-1	EMS	VECU	On Request (1 s)	Diesel Particulate Filter 1 Soot Load Percent 3719 Diesel Particulate Filter 1 Ash Load Percent 3720
CI (PGN 65259)	J1939-1	EMS	VECU	10 s	Component ID, etc.

All Rights Reserved

Message	Bus	From ECU	To ECU	Update Rate	Content
DPFC1 (PGN 64892)	J1939-1	EMS	VECU	1 s	DPF status, etc
EEC1 (61444)	J1939-1	EMS	VECU	20 ms Variable?	Engine Speed, etc
ET1 (PGN 65262)	J1939-1	EMS	VECU	1 s	Engine Coolant Temperature 110 Engine Fuel Temperature 1 174 Engine Oil Temperature 1 175
EFL/P1 (PGN 65263)	J1939-1	EMS	VECU	500 ms	Engine Oil Level 98 Engine Oil Pressure 100 Engine Crankcase Pressure 101 Engine Coolant Level 111
ERC1 (PGN 61440)	J1939-1	EMS (as retarder)	VECU	100 ms	Retarder Torque Mode 900 Actual Retarder - Percent Torque 520 Etc.
IC1 (PGN 65270)	J1939-1	EMS	VECU	500 ms	Engine Intake Manifold #1 Pressure 102 Engine Intake Manifold 1 Temperature 105 Engine Air Intake Pressure 106 Engine Exhaust Gas Temperature 173
IO (PGN 65244)	J1939-1	EMS	VECU	On Request (1 s)	Engine Total Idle Fuel Used 236 Engine Total Idle Hours 235
GFC (PGN 65199)	J1939-1	EMS	VECU	Currently Not Supported	Trip Fuel (Gaseous) 1039 Total Fuel Used (Gaseous) 1040
HRLFC (PGN 64777)	J1939-1	EMS	VECU	1 s	High-Resolution Engine Trip Fuel 5053 High Engine Total Fuel Used 5054
HOURS (PGN 65253)	J1939-1	EMS	VECU	15 s (on request)	Engine Total Hours of Operation 247 Engine Total Revolutions 249
LFE (PGN 26266)	J1939-1	EMS	VECU	100 ms	Engine Fuel Rate 183 Engine Instantaneous Fuel Economy 184 Engine Average Fuel Economy 185
LFC (PGN 65257)	J1939-1	EMS	VECU	On request (1 s)	Engine Trip Fuel 182 Engine Total Fuel Used 250
VI (PGN 65260)	J1939-1	EMS	VECU	On request (3 s)	VIN

VECU

Message	Bus	From ECU	To ECU	Update Rate	Content
AIR1	J1939-X	VECU	Ext CAN	1 s	Pneumatic Supply Pressure 46
AMB (65269)	J1939-X	VECU (as EMS)	Ext CAN	1 s	Ambient Air Temperature Barometric pressure
AT1S (PGN 64891)	J1939-X	VECU (per reply)	Ext CAN	On Request	Diesel Particulate Filter 1 Soot Load Percent 3719 Diesel Particulate Filter 1 Ash Load Percent 3720
AT1T1I	J1939-X	VECU (as ACM)	Ext CAN	1 s	Aftertreatment 1 SCR Catalyst Tank Level 1761 Aftertreatment 1 SCR Catalyst Tank Temperature 3031

All Rights Reserved

Message	Bus	From ECU	To ECU	Update Rate	Content
					Aftertreatment 1 SCR Catalyst Tank Level 2 3517 Aftertreatment 1 DEF Tank Low-Level Indicator 5245 Aftertreatment SCR Operator Inducement Severity 5246
B	J1939-X	VECU (as IC)	Ext CAN	1 s	Brake Application Pressure (SPN 116) Brake Primary Pressure (SPN 117) Brake Secondary Pressure (SPN 118) Parking Brake Red Warning Signal (SPN 3557)
CCVS (65265)	J1939-X	VECU	Ext CAN	100 ms	Vehicle Speed, etc.
CI (PGN 65259)	J1939-X	VECU (as EMS)	Ext CAN	On Request	Component ID, etc.
CVW (PGN 65136)	J1939-X	VECU (per reply)	Ext CAN	1 s	Weights
DD (65276)	J1939-X	VECU (as IC)	Ext CAN	1 s	Washer Fluid Level (SPN 80) Fuel Level 1 (SPN 96)
DM1	J1939-X	VECU (as received)	Ext CAN	1 s	Fault lamps, etc.
DPFC1 (PGN 64892)	J1939-X	VECU (as EMS)	Ext CAN	1 s	DPF status, etc.
EBC1 (PGN 61441)	J1939-X	VECU (as ABS)	Ext CAN	100 ms	Anti-Lock Braking (ABS) Active, etc.
EBC1 (PGN 61441)	J1939-X	Ext CAN	VECU	100 ms	Remote Accelerator Pedal Enable Switch Accelerator Interlock Switch
EBC1 (PGN 61441)	J1939-X	VECU	Cummins	100 ms	Remote Accelerator Pedal Enable Switch (SPN 969) Accelerator Interlock Switch (SPN 972) Engine retarder selection (SPN 973)
EBC2 (WSI PGN 65215)	J1939-X	VECU (as ABS)	Ext CAN	100 ms	Wheel Speeds
EBC5 (PGN 64964)	J1939-X	VECU (as ABS)	Ext CAN	100 ms	Hill Holder Mode
EEC1 (61444)	J1939-X	VECU (as EMS)	Ext CAN	As received	Engine Speed,etc
EEC2 (61443)	J1939-X	VECU	Ext CAN	50 ms	Accelerator Pedal Position
EEC2 (61443)	J1939-X	Ext CAN	VECU	50 ms	Remote Accelerator Pedal Position
EEC2 (61443)	J1939	VECU	Cummins	50 ms	Accelerator Pedal Position 1 Remote Accelerator Pedal Position
EFL/P1 (PGN 65263	J1939-X	VECU (as EMS)	Ext CAN	500 ms	Engine Oil Level 98 Engine Oil Pressure 100

All Rights Reserved

Message	Bus	From ECU	To ECU	Update Rate	Content
					Engine Crankcase Pressure 101 Engine Coolant Level 111
ET1 (PGN 65262)	J1939-X	VECU (as EMS)	Ext CAN	1 s	Engine Coolant Temperature 110 Engine Fuel Temperature 1 174 Engine Oil Temperature 1 175
ETC1	J1939-X	VECU (as TECU)	Ext CAN	10 ms	Driveline engaged status
ETC2	J1939-X	VECU (as TECU)	Ext CAN	100 ms	Current Gear Status Requested gear status
ETC7	J1939-X	VECU (as TECU)	Ext CAN	100 ms	Shift and mode indicators, etc.
GFC (PGN 65199)	J1939-1	VECU (as EMS)	Ext CAN	On Request	Trip Fuel (Gaseous) 1039 Total Fuel Used (Gaseous) 1040
HOURS (PGN 65253)	J1939-X	VECU (as EMS)	Ext CAN	On Request	Engine Total Hours of Operation 247 Engine Total Revolutions 249
HRLFC (PGN 64777)	J1939-X	VECU (as EMS)	Ext CAN	1 s	High-Resolution Engine Trip Fuel 5053 High Engine Total Fuel Used 5054
HRW (PGN 65134)	J1939-X	VECU (as ABS)	Ext CAN	20 ms	Wheel speeds
IO (PGN 65244)	J1939-X	VECU (as EMS)	Ext CAN	On Request	Engine Total Idle Fuel Used 236 Engine Total Idle Hours 235
IC1 (PGN 65270)	J1939-X	VECU (as EMS)	Ext CAN	500 ms	Engine Exhaust Gas Temperature, etc
LC (PGN 65089)	J1939-X	VECU (as LCM)	Ext CAN	1 s and change of state	Light switches, etc.
LFE (PGN 26266)	J1939-X	VECU (as EMS)	Ext CAN	100 ms	Engine Fuel Rate 183 Engine Instantaneous Fuel Economy 184 Engine Average Fuel Economy 185
OEL (PGN 64972)	J1939-X	VECU (as IC)	Ext CAN	1 s and change of state	Main Light Switch 2872 Turn Signal Switch 2876 Hazard Light Switch 2875 High-Low Beam Switch 2874 Operators Desired Back-light 2878
PTO (PGN 65264)	J1939-X	VECU	Ext CAN	100 ms	Power take-off Set Speed 187 Engine PTO Governor Enable Switch 980 Engine Remote PTO Governor Preprog-rammed Speed Control Switch 979 Engine Remote PTO Governor Variable Speed Control Switch 978 Engine PTO Governor Set Switch 984 Engine PTO Governor Coast/Decelerate Switch 983 Engine PTO Governor Resume Switch 982

All Rights Reserved

Message	Bus	From ECU	To ECU	Update Rate	Content
PTODE (PGN 64932)	J1939-X	VECU (as TECU)	Ext CAN	100 ms	Engagement Consent – Transmission input shaft PTO 2 (SPN 3457) Engagement Consent – Transmission input shaft PTO 1 (SPN 3456) Engagement Consent – Transmission output shaft PTO (SPN 3458)
PTODE (PGN 64932)	J1939-1	VECU	TECU, Allison	100 ms	Enable Switch – Transmission input shaft PTO 2 (SPN 3453) Enable Switch – Transmission input shaft PTO 1 (SPN 3452)
PTODE (PGN 64932)	J1939-1	Ext CAN	VECU	100 ms	Enable Switch – Transmission input shaft PTO 2 (SPN 3453) Enable Switch – Transmission input shaft PTO 1 (SPN 3452) Enable Switch - PTO Engine Accessory Drive 1
Request	J1939-X	Ext CAN	VECU		PGN
Request	J1939-1	VECU	As received	As received in most cases	PGN
SERV (PGN 65216)	J1939-X	VECU	Ext CAN	On Request	Service Component Identification Service Distance (associated to upper Service component ID) Service Component Identification Service delay/calendar time based (associated to upper Service component ID) Service Component Identification Service Delay/Operational Time Based (associated to upper Service component ID)
SOFT (PGN 65242)	J1939-1	VECU	Ext CAN	On Request	Variable length
TCFG (PGN 65250)	J1939-1	VECU	Ext CAN	On Request	Number of Reverse Gear Ratios 958 Number of Forward Gear Ratios 957 Transmission Gear Ratio 581
TC1 (PGN 256)	J1939-1	VECU	TECU (Allison)	50 ms (when active)	See Allison data link Communication Guide
TC1 (PGN 256)	J1939-X	VECU (as Shifter 05 and 06)	Ext CAN	50 ms (when active)	See Allison data link Communication Guide
TC1 (PGN 256)	J1939-1	Allison Shifter	VECU	50 ms (when active)	See Allison data link Communication Guide
TC1 (PGN 256)	J1939-X	EXT CAN (DA TECU)	VECU	50 ms (when active)	See Allison data link Communication Guide
TD (PGN 65254)	J1939-X	VECU (as IC)	Ext CAN	On Request	Time & date
TSC1 (PGN 0)	J1939-1	VECU	EMS	10 ms	Engine Override Control Mode Override Control mode Priority Engine Requested Torque/Torque Limit Engine Requested Speed/Speed Limit 898

All Rights Reserved

Message	Bus	From ECU	To ECU	Update Rate	Content
TSC1 (PGN 0)	J1939-1	Ext CAN (DA EMS)	VECU	10 ms	Engine Override Control Mode Override Control Mode Priority Engine Requested Torque/Torque Limit Engine Requested Speed/Speed Limit 898
TRF1 (PGN 65272)	J1939-X	VECU (as TECU)	Ext CAN	1 s	Transmission Oil Temperature 177, etc.
TRF2 (PGN 64917)	J1939-X	VECU (as TECU)	Ext CAN	1 s	Transmission Overheat Indicator SPN 5345
RF (PGN 65275)	J1939-X	VECU (as TECU)	Ext CAN	1 s	Hydraulic Retarder Oil Temperature Driveline Retarder Overheat Indicator
VD (PGN 65248)	J1939-X	VECU (as IC)	Ext CAN	1 s	Total Vehicle Distance 245 Convert from VDHR
VDC1 (PGN 65103)	J1939-X	VECU (as ABS)	Ext CAN	100 ms	VDC Information Signal, etc.
VDHR (PGN 65217)	J1939-X	VECU (as IC)	Ext CAN	1 s	High-Resolution Total Vehicle Distance 917
VH (PGN 65255)	J1939-X	VECU	Ext CAN	On Request	Total Vehicle Hours 246 Total power take-off Hours 248
VI (PGN 65260)	J1939-X	VECU (as EMS)	Ext CAN	On Request	VIN
VW (PGN 65258)	J1939-X	VECU (as ECS)	Ext CAN	1 s	Weights (note this is multiframe so is difficult to respond to so will gateway at received rate)
VDC1 (PGN 65103)	J1939-X	VECU (as ACB)	Ext CAN	100 ms	VDC Information Signal, etc.
VP190 (PGN 65470)	J1939-X	VECU (as EMS)	Ext CAN	15 s	SCR used
VP60	J1939-1	VECU	TECU (I-Shift)	100 ms	Reverse Inhibit Inhibit Gear Engaged (from TC1) PTO Conditions #1 PTO Conditions #2
VEP1 (PGN 65271)	J1939-X	VECU (as IC)	Ext CAN	1 s	SPN 168 Battery Potential/Power Input 1

Transmission

Message	Bus	From ECU	To ECU	Update Rate	Content
ETC1	J1939-1	Automated Trans	VECU	10 ms	Driveline engaged status
ETC2	J1939-1	Automated Trans	VECU	100 ms	Current gear status, requested gear status
ETC7	J1939-1	Allison	VECU	100 ms	Range Display, Mode indicator
PTODE (PGN 64932)	J1939-1	TECU (I-Shift)	VECU	100 ms	Engagement Consent – Transmission input shaft PTO 2 (SPN 3457) Engagement Consent – Transmission input shaft PTO 1 (SPN 3456)

All Rights Reserved

Message	Bus	From ECU	To ECU	Update Rate	Content
PTODE (PGN 64932)	J1939-1	TECU (Allison)	VECU	100 ms	Engagement Consent – Transmission input shaft PTO 2 (SPN 3457) Engagement Consent – Transmission input shaft PTO 1 (SPN 3456) Engagement Consent – Transmission output shaft PTO (SPN 3458)
PTODE (PGN 64932)	J1939-1	VECU, EXT CAN (SA 33, SA 23)	TECU (Allison)	100 ms	Enable Switch – Transmission input shaft PTO 2 (SPN 3453) Enable Switch – Transmission input shaft PTO 1 (SPN 3452) Engagement Consent – Transmission output shaft PTO (SPN 3458)
SOFT (PGN 65242)	J1939-1	Allison	VECU	On Request	Variable Length
TranTC1 (256)	J1939-1	EXT CAN, Allison Shifter	TECU (Allison)	50 ms (when active)	See Allison data link Communication Guide
TCFG (PGN 65250)	J1939-1	Allison	VECU	On Request	Number of Reverse Gear Ratios 958 Number of Forward Gear Ratios 957 Transmission Gear Ratio 581
TRF1 (PGN 65272)	J1939-1	Automated Trans	VECU	1 s	Transmission Oil Temperature 177, etc.
TRF2 (PGN 64917)	J1939-1	Allison	VECU	1 s	Transmission Overheat Indicator SPN 5345
RF (PGN 65275)	J1939-1	Allison	VECU	1 s	Hydraulic Retarder Oil Temperature Driveline Retarder Overheat Indicator
VP60	J1939-1	VECU	I-Shift	100 ms	Inhibit Gear Engaged Reverse Inhibit PTO Conditions #1 PTO Conditions #2

ECS

Message	Bus	From ECU	To ECU	Update Rate	Content
VW (PGN 65258)	J1939-X	ECS	VECU	1 second (SAE says On Request)	Weight by axle (1 frame for each axle)

All Rights Reserved

Parameters Description and Location

Caption Description	Location	Resolution	Min Value	Max Value	Default	Parameter ID
Ext CAN (CAN2) Diagnostics ***Enabling this parameter results in faults if the Body CAN is not properly connected or if the device does not acknowledge messages.***	VECU	1	0	1	0	Level 4 QKE
Ext CAN (CAN2) Fault Level ***This parameter adjusts the behaviour of the fault enabled by QKE.***	VECU	1	0	1	0	Level 4 QKF
Ext CAN Control enable ***This parameter will allow the truck to accept body commands whereby QKX and optionally QKW must represent the source address of the device.***	VECU	1	0	1	0	Level 4 QKH
Ext CAN gateway enable ***This parameter enables transmission of information to external devices. Use QKE to enable diagnostics for this port. If on-request parameters are needed, then the SA of the requesting device must be set by QKX and vehicle sources can be changed for some specific messages by QKG, QKV, QKU, and QIV. If vehicle response to commands is also expected, then set QKH***	VECU	1	0	1	0 (set to 1 per project)	Level 4 QIW
Transmission Type	VECU	1	0	7	0	Level 2 BZN
SA for device (Note F1 & F9 SA for TSC1, PTODE, VP45, EEC2, EBC1) ***If a device on the Ext CAN will request messages or send commands to the truck then this needs to reflect the source address of the added device. Also set QKH Take note of QKD***	VECU	1	0	255	229	Level 4 QKX
SA for device (Note F1SA for TC1) ***If a device on the Ext CAN is to broadcast TC1 commands then this needs to be set to what the transmission will accept and the device needs to send with this source address. However this cannot be the same as any on-vehicle shifter broadcasting per QIV. Also set parameter QKH.***	VECU	1	0	255	6	Level 4 QKW
SA for GFC (Note: F4 SA of message used to respond to device request) ***This parameter should reflect the source address of the vehicle device responding to a request for message GFC.***	VECU	1	0	255	0	Level 4 QKG

All Rights Reserved

Caption Description	Location	Resolution	Min Value	Max Value	Default	Parameter ID
SA for CVW	VECU	1	0	255	3	Level 4 QKV
SA for TCFG (Note: F4 SA) ***This parameter should reflect the source address of the vehicle device responding to a request for message TCFG.***	VECU	1	0	255	3	Level 4 QKU
SA for TC1 (Note: F2 SA) ***This parameter should reflect the source address of the vehicle device supplying message TC1***	VECU	1	0	255	5	Level 4 QIV
Ext CAN Break Pedal Override ***If this parameter is set then Ext CAN accelerator pedal position and engine speed commands will be set to idle while the service brake is pressed.***	VECU	1	0	255	1	Level 4 QKD

Notes

All Rights Reserved

CAN Bus Road Speed Signal Kit

Note: The kit shown below is required to obtain road speed signal through J–1939 CAN Bus with GEN 2 Interior Trucks. It is required for Conventional trucks with mDRIVE and Mack Manual Transmissions. To order this kit, you must contact Body Builder Support at 1-877-770-7575 and have VIN# ready. This kit will only be sent for trucks that are being up fitted with bodies that require road speed signal.

J–1939 CAN Bus Reader Installation for Road Speed

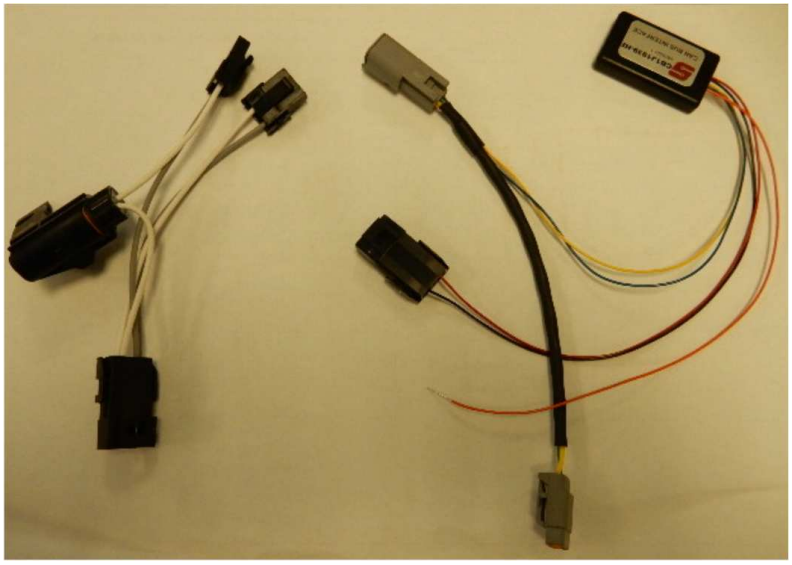

W3140107

Fig. 37 Sailes CB1J1939-HF kit

Note: This kit is not required if your truck has an Allison transmission. Allison provides a road speed signal at the Allison Body Builder connector located left of the steering column behind the kick panel. Wire # N125 Pin F of the connector. (See Connector Below)

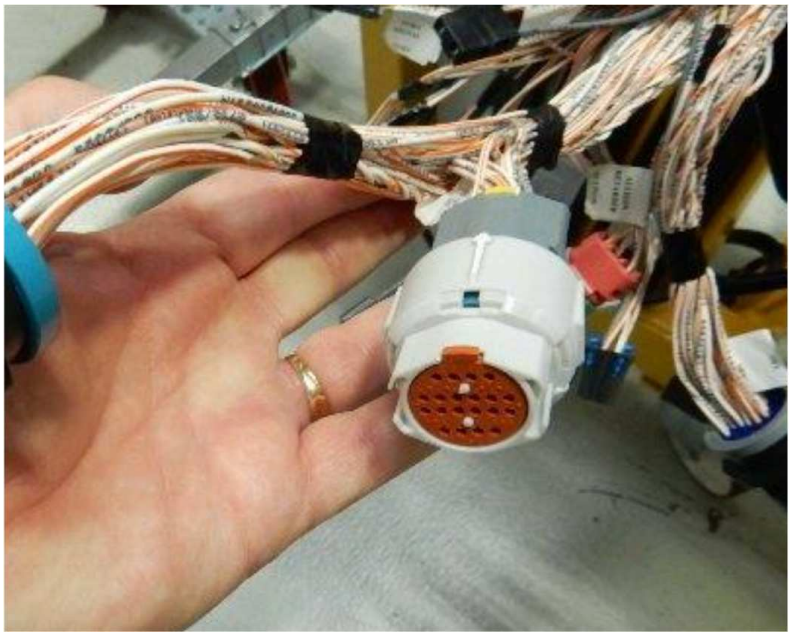

W3140108

Fig. 38 Allison Body Builder Connector

All Rights Reserved

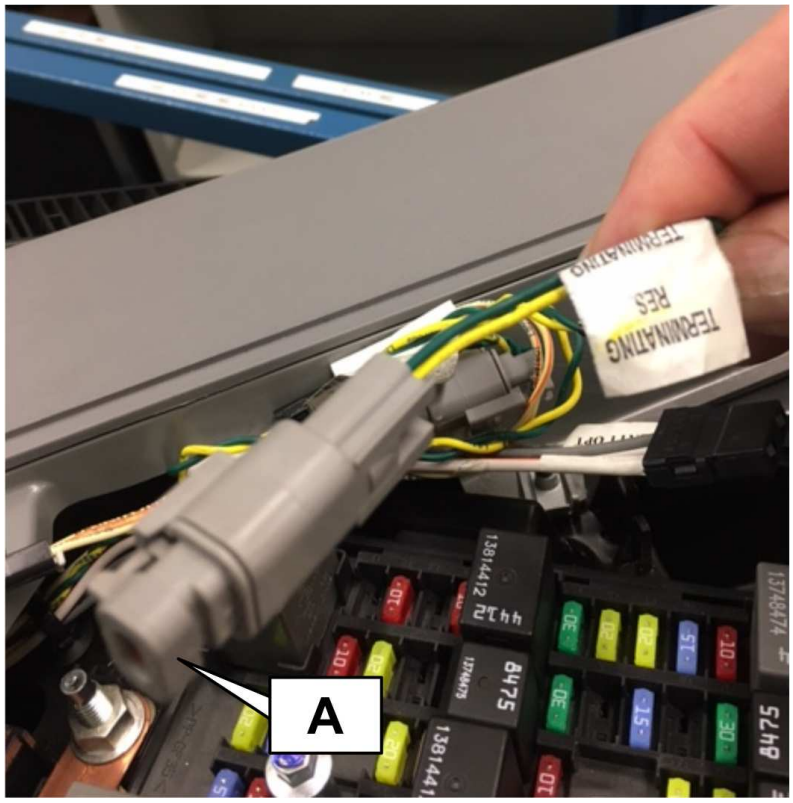

W3140109

Fig. 39 Terminating resistor

A - Find the terminating resistor under the pie plate at Fuse relay panel and remove the terminating resistor.

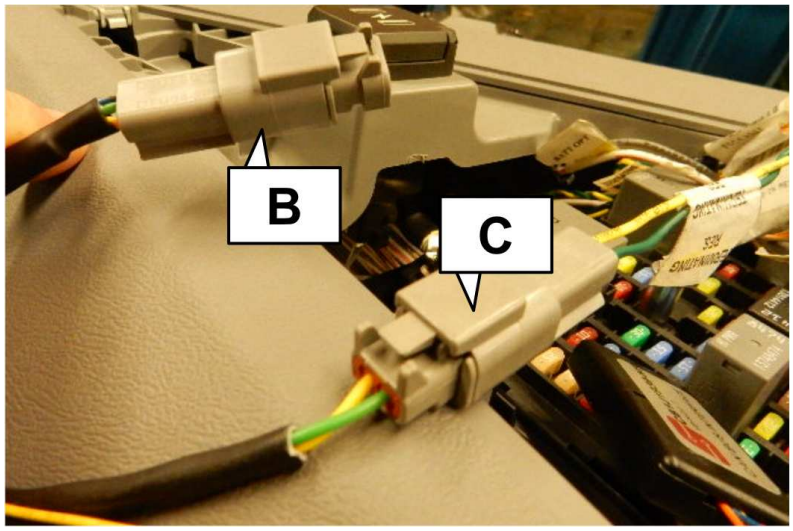

W3140110

Fig. 40 Connecting the CAN Bus reader

B – Insert terminating resistor in the female connector on the CAN Bus reader cable.

C – Plug in the CAN Bus cable male connector in the female connector on the truck cab harness term resistor connector.

All Rights Reserved

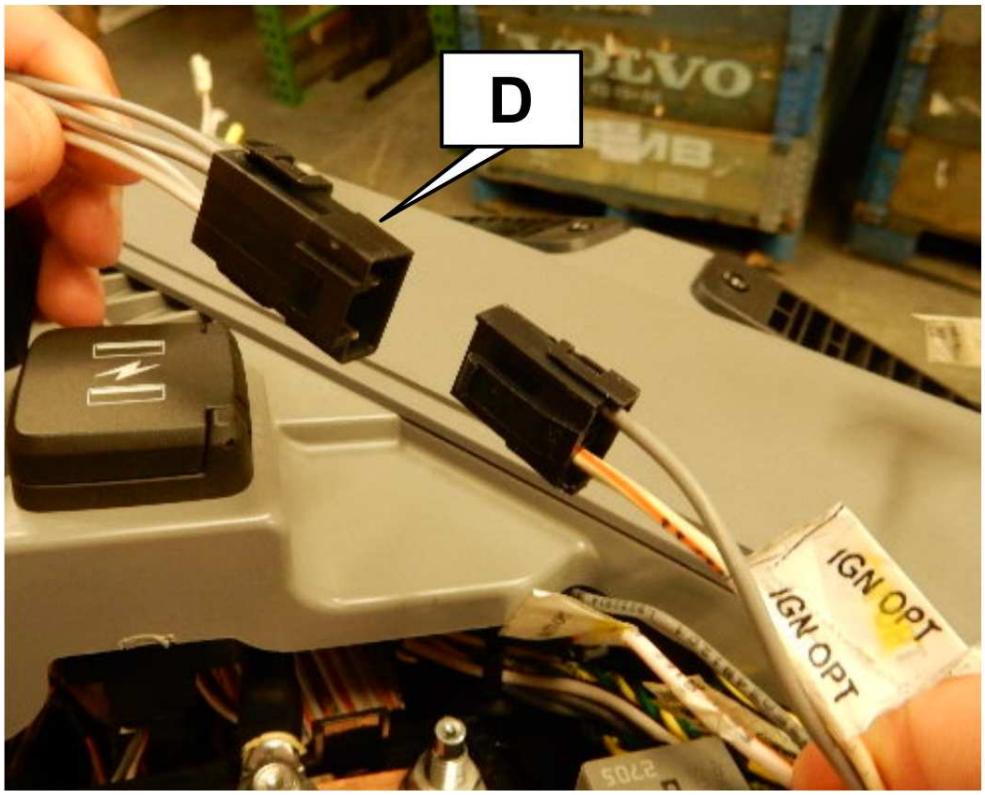

W3140111

Fig. 41 IGN OPT connector

D – Connect the female Y power harness connector to the male IGN OPT connector

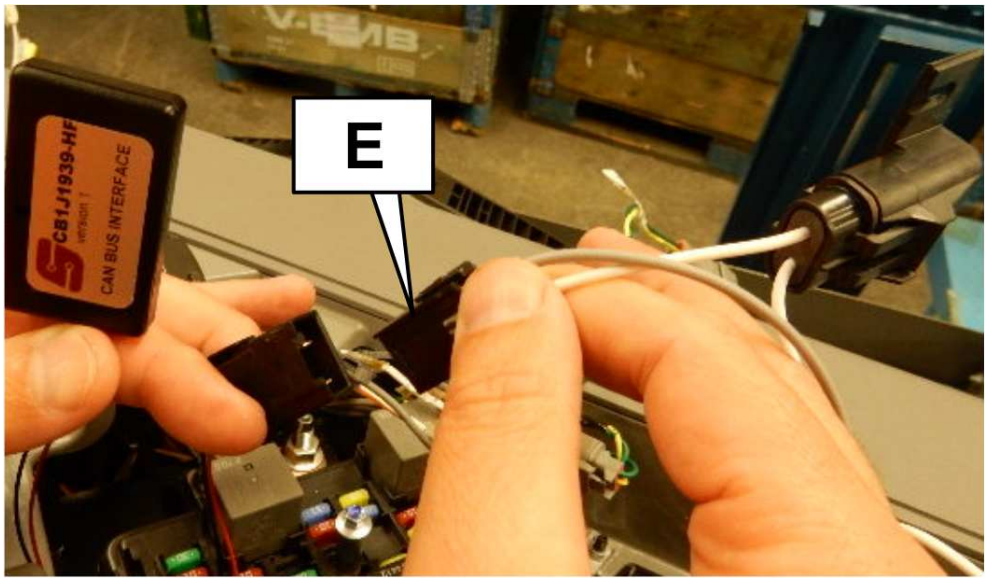

W3140112

Fig. 42 Connecting the CAN Bus reader

E – Connect the male connector of the power harness to the female power connector on the CAN Bus reader (fused side).

Note: The other leg of the power harness is for another ignition option.

All Rights Reserved

W3140113

Fig. 43 CAN Bus reader installed

Secure with cable ties. Installation is complete. This is what it should look like when completed.

Note: The orange wire is the road speed output for your device.

Note: The CAN Bus reader produces a 12-volt speed pulse of 8000 ppm.

Note: After the installation of CAN Bus, check the LED indicators on the device.
Stage 1: Both Green and Red LEDs will lit approximately for 1 second
Stage 2: Green LED will lit while listening for data
Stage 3: Red LED indicates CAN has been detected
Stage 4: Green LED should pulse when vehicle is driven. Red LED should stay on

Troubleshoot

If the CAN bus is installed and the LED's are not lit as indicated, follow the procedure to troubleshoot:

1 Check power and ground to the device
2 Check that the terminating resistor is connected to the female connector of the device
3 Check that the J1939 connector wires (green and yellow) are plugged to the truck. Ensure that the wires are match on both sides of the connectors. (refer Figure. 40 connector C)
4 If the device does not produce the speed output signal or you need a ground speed reader call body builder support 1-877-770-7575.

All Rights Reserved